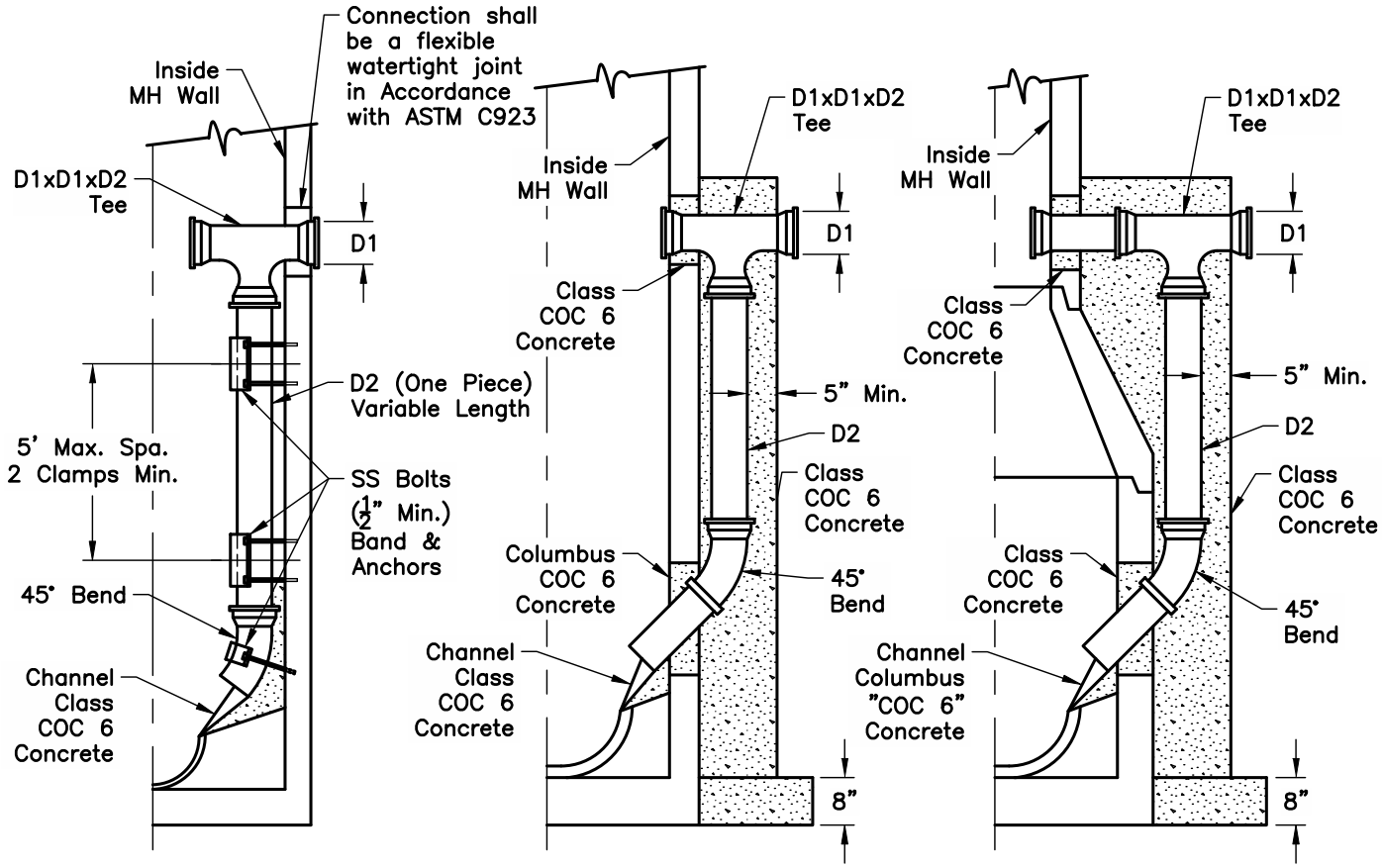

INSIDE DROP
(Half Section)

OUTSIDE DROP
(Half Section)

OUTSIDE DROP
(Half Section)

DETAIL NOTES

1. Drop is required when invert differential is 24–in or greater.
2. Height of drop pipe is to be shown on the plans or will be determined at the time of construction.
3. All work and materials required to construct the inside or outside drop shall be included for payment under Columbus CMS Item 604, or Item 901.
4. Unless otherwise required by the plans, an outside drop will only be constructed on new manholes.
5. Materials for the tee, drop pipe and bend shall be of one type and be one of the following; Inside Drop: Cast–iron or PVC. Outside Drop: Cast Iron, VCP, or PVC.
6. Outside drop pipes require a 5–in thick (minimum) Columbus Class COC 6 Concrete
encasement on three sides of pipe and shall be tied to manhole wall with 5/8–in
Stainless Steel–"U" rods x 5–in long @ 12–in.
7. Inside drop may be used on new construction provided that a 60–in base and riser sections are used.
8. For existing manholes, wall penetrations shall be cored and booted as appropriate.
9. Not for lateral connection. This detail is intended for mainline sewer connections. No sanitary lateral connections are permitted into manholes.

PIPE DIAMETER	
D1	D2
8"	8"
10"	10"
12"	12"
15"	12"
18"	12"
21"	12"
24"	12"

Approved By:

City Engineer, EMH&T Inc

City Service Director

STANDARD DIMENSIONS FOR

INSIDE DROP & OUTSIDE DROP FOR MANHOLES

CITY OF GROVE CITY, OHIO

STANDARD CONSTRUCTION DRAWING

Revised		Drawing No.
February 2019		C-GC-25