175 S 3RD STREET
SUITE 170
COLUMBUS, OH 43215
(330) 524-3113
WWW.PERMITSOLUTIONSOHIO.COM

The City of Grove City
Planning and Zoning Department
4035 Broadway
Grove City, OH 43123

August 1st, 2016

RECEIVED
AUG 01 2016
GC PLANNING COMMISSION

RE: McDonald's Remodel – 2596 London-Groveport Road

Dear Planning and Development:

This letter is in regards to the proposed McDonald's Remodel Project located at 2596 London-Groveport Road on behalf of McDonald's Corporation.

The project scope includes remodeling the interior and exterior of the existing McDonald's Restaurant and updating the site with a double drive-thru. A ten foot addition will be added to the front of the building and a 25' addition will be added to the rear to increase dining area and freezer/cooler and storage area. The kitchen will be upgraded along with the dining space and décor. The dining space will promote an inviting, comfortable atmosphere for customers. The exterior of the building will consist mainly of the existing brick, and will include aesthetic updates and signage to provide a modernized concept and conform with McDonald's nationwide branding. The exterior patio will remain and will be adjusted with the addition to the front of the building. The patio, along with the interior and exterior of the building, will be ADA accessible. The site will be modified to provide adequate space for a double drive-thru. Parking stalls, landscaping, and existing curbs will be slightly altered to assist with vehicle stacking and traffic flow and the trash enclosure will be relocated for easier access. The path of travel from the accessible parking stalls, including crosswalks, curb ramps, sidewalks, etc. will be updated to meet ADA accessibility standards and to provide a safe environment on site.

The site is located in a PUD district, therefore, we are submitting a development plan application for building and site changes and special use permits for modification to the patio and drive-thru. We are seeking approval of the McDonald's rebuild project at the September 6th Planning Commission meeting.

McDonald's corporation is excited to bring the updated restaurant to the community and we look forward to present the project to city staff and Planning Commission. Thank you for the opportunity to submit the supporting information illustrating the proposed work to be completed. Please do not hesitate to contact us with any questions or for additional information. We look forward to working with the staff of Grove City on what we believe will be a successful project for the community.

Thank You,

Lynsey Jordan
Permit Solutions, Inc.

Comprehensive Sign Plan

Proposed Signs:

Free-standing Signs:

Menu Board – MB Area: 41SF Height: 6'-9"

Wall Signs (WS):

Logo Arch – Area: 14 SF

Wordmark - Area: 33SF

Welcome Sign – Area: 2.6SF

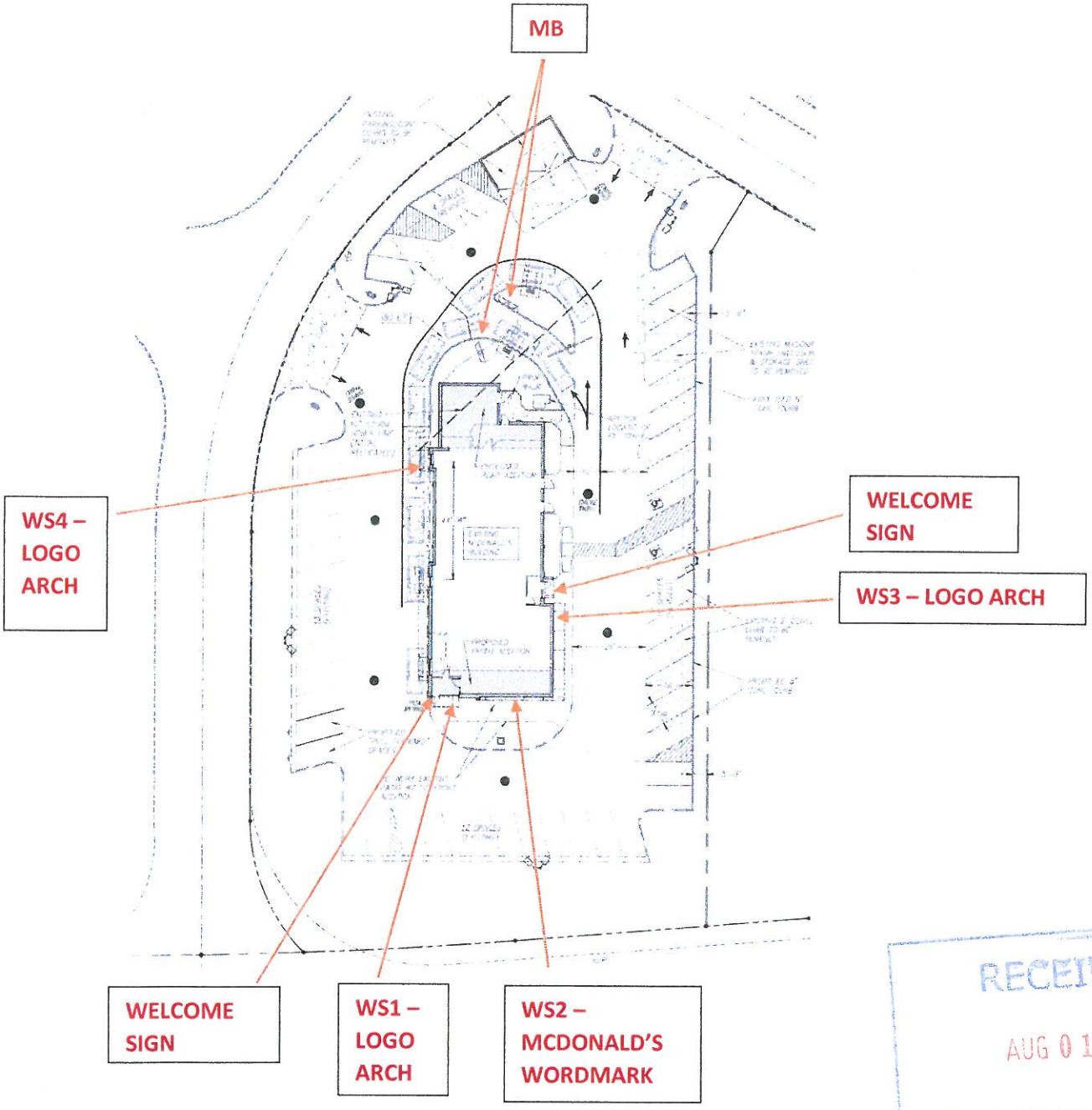

RECEIVED
AUG 01 2016
GC PLANNING COMMISSION

PRODUCT COMPONENTS: AS SHIPPED

	QTY	PART#	DESCRIPTION	CARTON SIZE	WEIGHT
C	1	A740460	BASE	85x19x15	242#
	2	A740161	TRIANGLE ASS'YS	72x27x25	145#
	1	A740466	INSTALL KIT	20x6x6	12#
	1	A740456	RAINCAP BEAM	85x18x9	60#
	1	A740453	RAINCAP	105x26x4	25#

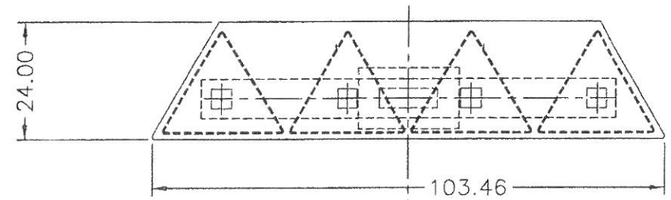

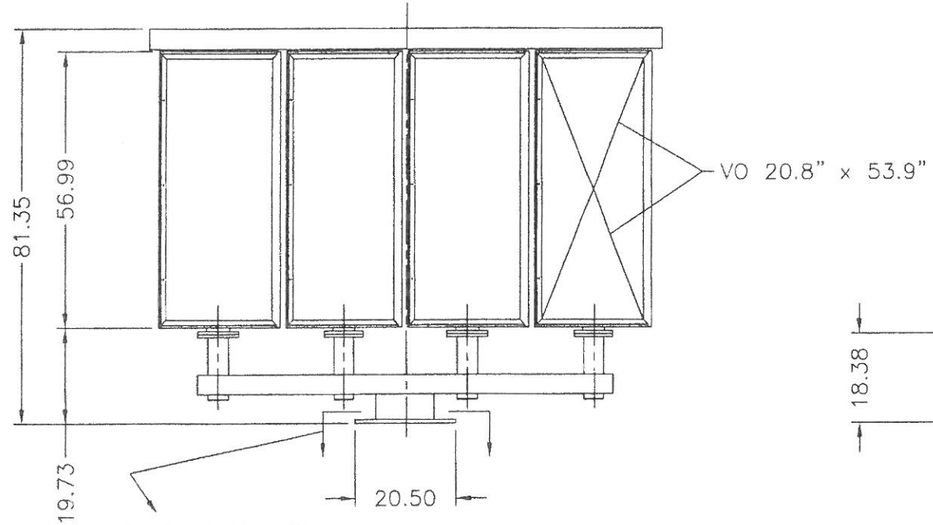

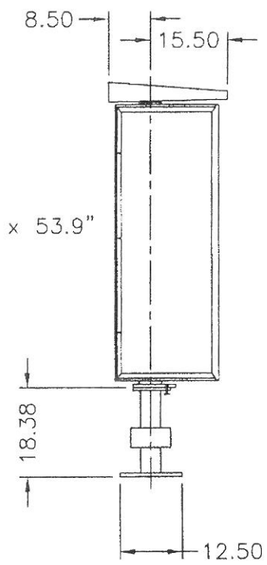

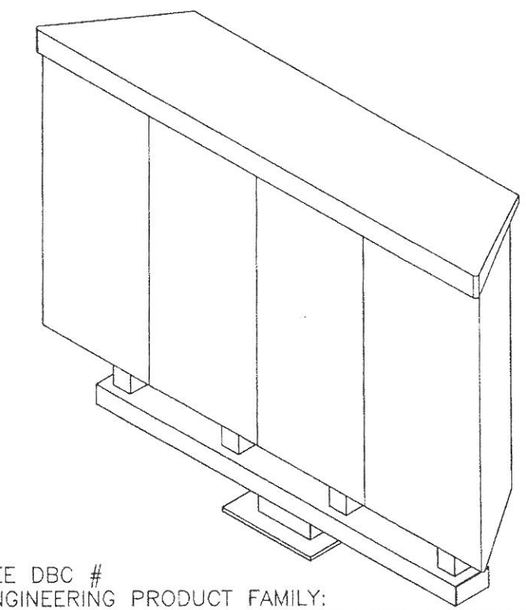

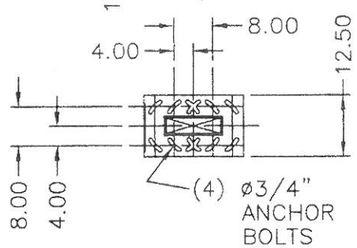

REV.	REVISION	REV. BY	DATE
C	ADDED PRODUCT COMPONENT NOTES	WLC	10/5/12
B	ø3/4" WAS ø5/8", REMOVED NOTES	WLC	9/24/12
A	OPF TO OPO NAME CHANGE	PAV	10/03/11

SEE DBC #
ENGINEERING PRODUCT FAMILY:

KEYSER INDUSTRIES FPI
FLORIDA PLASTICS INTERNATIONAL, INC.
10200 SOUTH KEDZIE AVE.
EVERGREEN PARK, IL. 60805
(708) 499-0400 FAX (708) 499-4620

RoHS COMPLIANT

THIS PART/ASSEMBLY SHALL CONFORM TO "FLORIDA PLASTICS INTERNATIONAL" BANNED SUBSTANCE AND ENVIRONMENTAL HAZARDOUS SUBSTANCE REQUIREMENTS DOCUMENTED IN RoHS COMPLIANCE BULLETIN.

TOLERANCES UNLESS OTHERWISE SPECIFIED:
.X ±.030 .XXX ±.010
.XX ±.020 ANGULAR ±1 DEGREE
DENOTES CRITICAL DIMENSION TO BE INSPECTED

THIS DRAWING AND ALL INFORMATION THEREON IS THE PROPERTY OF FLORIDA PLASTICS INT'L INC. AND SHALL NOT BE COPIED OR REPRODUCED WITHOUT THEIR WRITTEN PERMISSION.

TITLE OPO-4 MENUBOARD			SIZE B
DWN WLC	DATE	SCALE	SHEET OF
CHK PAV	DATE 6/27/11	DWG NO. OPO-4	

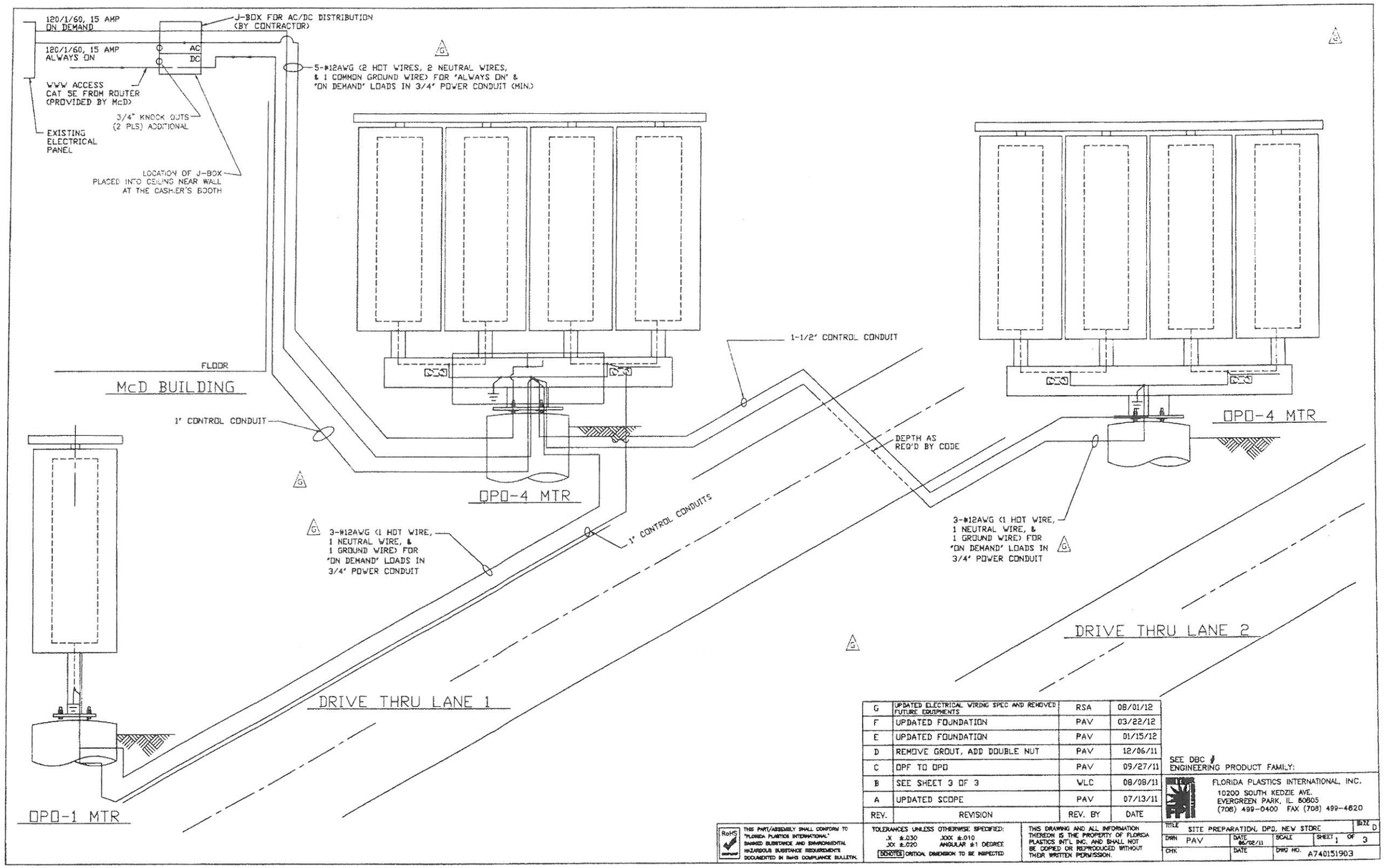

REV.	REVISION	REV. BY	DATE
G	UPDATED ELECTRICAL WIRING SPEC AND REMOVED FUTURE EQUIPMENTS	RSA	08/01/12
F	UPDATED FOUNDATION	PAV	03/22/12
E	UPDATED FOUNDATION	PAV	01/15/12
D	REMOVE GROUT, ADD DOUBLE NUT	PAV	12/06/11
C	OPF TO OPD	PAV	09/27/11
B	SEE SHEET 3 OF 3	WLC	08/08/11
A	UPDATED SCOPE	PAV	07/13/11

SEE DBC ENGINEERING PRODUCT FAMILY:

FLORIDA PLASTICS INTERNATIONAL, INC.
10200 SOUTH KEDZIE AVE.
EVERGREEN PARK, IL 60805
(708) 499-0400 FAX (708) 499-4620

RoHS COMPLIANT

THIS PART/ASSEMBLY SHALL CONFORM TO "FLORIDA PLASTICS INTERNATIONAL" BANNED SUBSTANCE AND ENVIRONMENTAL HAZARDOUS SUBSTANCE REQUIREMENTS DOCUMENTED IN RoHS COMPLIANCE BULLETIN.

TOLERANCES UNLESS OTHERWISE SPECIFIED:
.X ±.030 .XXX ±.010
.XX ±.020 ANGULAR ±1 DEGREE
CRITICAL DIMENSION TO BE INSPECTED

THIS DRAWING AND ALL INFORMATION THEREON IS THE PROPERTY OF FLORIDA PLASTICS INT'L INC. AND SHALL NOT BE COPIED OR REPRODUCED WITHOUT THEIR WRITTEN PERMISSION.

TITLE	SITE PREPARATION, OPD, NEW STORE		SIZE D
DWN PAV	DATE 06/08/11	SCALE	SHEET 1 OF 3
CHK	DATE	DWG NO. A740151903	

NOTE:

INFORMATION SHOWN SCHEMATICALLY
FIELD INSTALLATION WILL VARY

NOTICE: FLORIDA PLASTICS CAN NOT BE HELD RESPONSIBLE FOR ANY VIOLATIONS OF THE SPECIFICATIONS SET FORTH WITHIN THIS DOCUMENT.

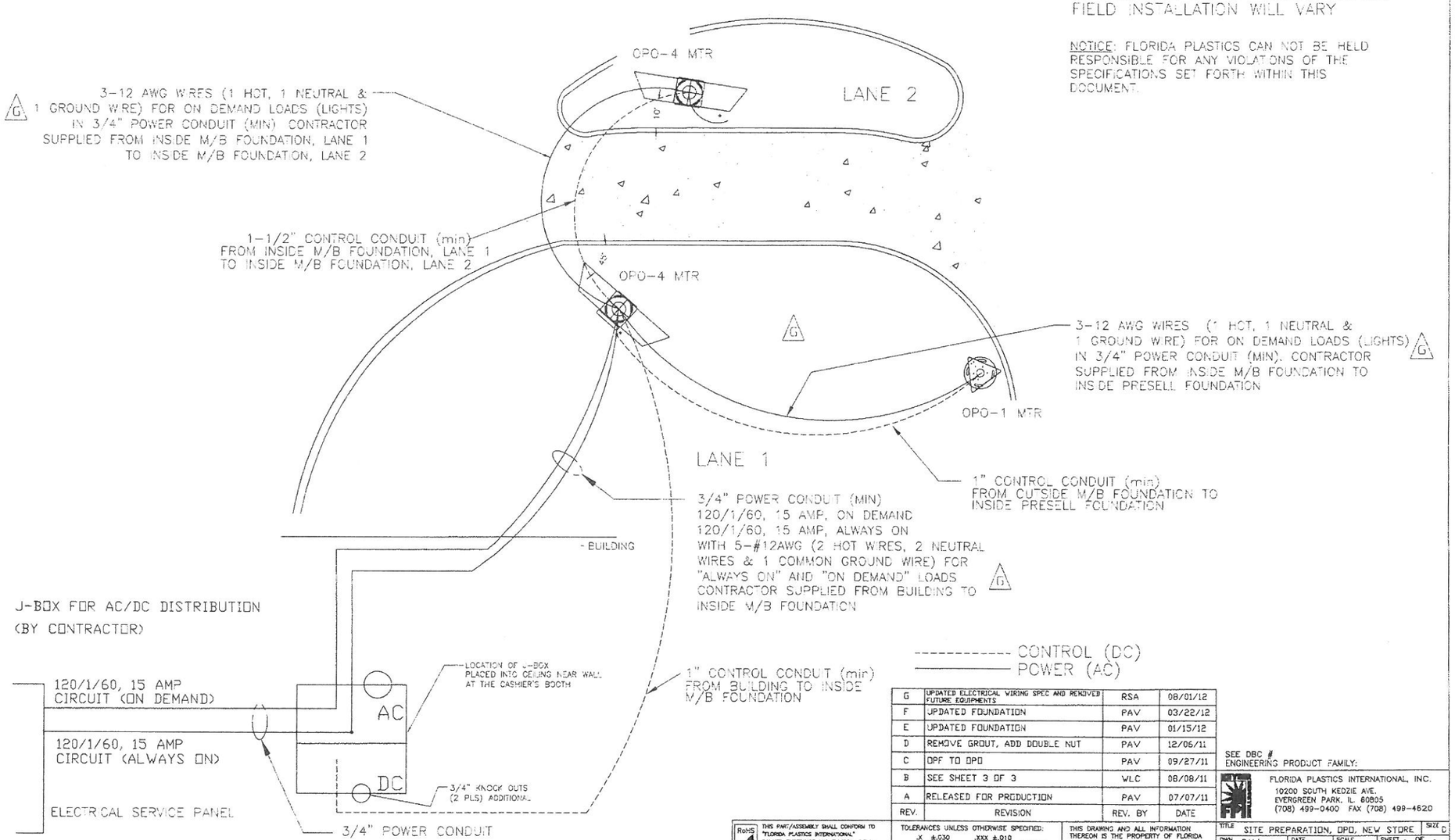

REV.	REVISION	REV. BY	DATE
G	UPDATED ELECTRICAL WIRING SPEC AND REMOVED FUTURE EQUIPMENTS	RSA	08/01/12
F	UPDATED FOUNDATION	PAV	03/22/12
E	UPDATED FOUNDATION	PAV	01/15/12
D	REMOVE GROUT, ADD DOUBLE NUT	PAV	12/06/11
C	OPF TO OPO	PAV	09/27/11
B	SEE SHEET 3 OF 3	WLC	08/08/11
A	RELEASED FOR PRODUCTION	PAV	07/07/11

SEE DBC #
ENGINEERING PRODUCT FAMILY:

FLORIDA PLASTICS INTERNATIONAL, INC.
10200 SOUTH KEDZIE AVE.
EVERGREEN PARK, IL 60805
(708) 499-0400 FAX (708) 499-4620

RoHS COMPLIANT — THIS PART/ASSEMBLY SHALL CONFORM TO "FLORIDA PLASTICS INTERNATIONAL" BANNED SUBSTANCE AND ENVIRONMENTAL HAZARDOUS SUBSTANCE REQUIREMENTS DOCUMENTED IN RoHS COMPLIANCE BULLETIN.

TOLERANCES UNLESS OTHERWISE SPECIFIED:
.X ±.030 .XXX ±.010
.XX ±.020 ANGULAR ±1 DEGREE
DENOTES CRITICAL DIMENSION TO BE INSPECTED

THIS DRAWING AND ALL INFORMATION THEREON IS THE PROPERTY OF FLORIDA PLASTICS INT'L INC. AND SHALL NOT BE COPIED OR REPRODUCED WITHOUT THEIR WRITTEN PERMISSION.

TITLE	SITE PREPARATION, OPO, NEW STORE		SIZE D
DWN PAV	DATE 08/02/11	SCALE	SHEET 2 OF 3
CHK	DATE	DWG NO. A740151903	

ANCHOR BOLT CAGE KIT AND CONDUIT PLACEMENT DETAILS

INSTRUCTIONS FOR OPO MENU BOARD 90–120 MPH APPLICATIONS

G.C. NOTES:

FOUNDATION DRAWINGS CAN BE FOUND BY ACCESSING McDONALD'S WEBSITE AT:
https://www.accessmcd.com/accessmcd/na/us/natl/restaurant_ops/usrd/design/siteplanguide.html

CONTACT FLORIDA PLASTICS INC. TO ORDER THE ANCHOR BOLT CAGE KIT AND REBAR AT 800–499–0400.

ANCHOR BOLT CAGE KIT FOR BOTH 90 AND 120 MPH IS THIS SAME KIT AND THAT IS PART# OPO–4 ABK.

THE REBAR PART# BASED ON THE WIND LOAD IS DIFFERENT:
90 MPH REBAR LENGTH= 88 7/16" PART# OP04RB905
120 MPH REBAR LENGTH= 106½" PART# OP04RB1205

PLEASE NOTE THAT IT IS THE INSTALLERS RESPONSIBILITY TO VERIFY THAT ALL STATE AND LOCAL CODES ARE MET. CONTACT THE LOCAL MUNICIPALITY FOR DETAILS.

ANCHOR BOLT TEMPLATE
USE THE OUTSIDE (4) HOLES FOR THESE APPLICATIONS ONLY

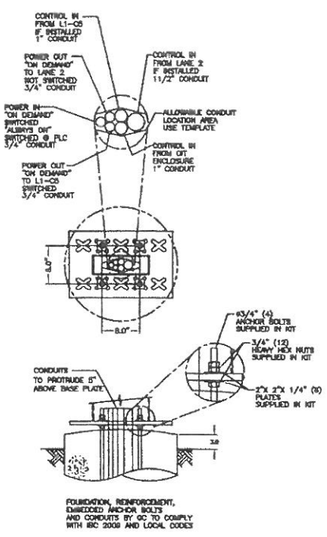

L1–OPO–4MTR

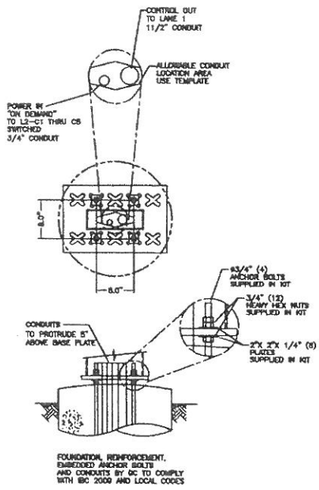

L2–OPO–4MTR
IF APPLICABLE

INSTRUCTIONS FOR OPO MENU BOARD 150 MPH APPLICATIONS

G.C. NOTES:

FOUNDATION DRAWINGS CAN BE FOUND BY ACCESSING McDONALD'S WEBSITE AT:
https://www.accessmcd.com/accessmcd/na/us/natl/restaurant_ops/usrd/design/siteplanguide.html

CONTACT FLORIDA PLASTICS INC. TO ORDER THE ANCHOR BOLT CAGE KIT AND REBAR AT 800–499–0400.

ANCHOR BOLT CAGE KIT FOR 150 MPH IS PART # OPO–4HWABK.

150 MPH REBAR LENGTH= 130½" PART# OP04HWRB

PLEASE NOTE THAT IT IS THE INSTALLERS RESPONSIBILITY TO VERIFY THAT ALL STATE AND LOCAL CODES ARE MET. CONTACT THE LOCAL MUNICIPALITY FOR DETAILS.

ANCHOR BOLT TEMPLATE
USE ALL (6) HOLES FOR THIS APPLICATION

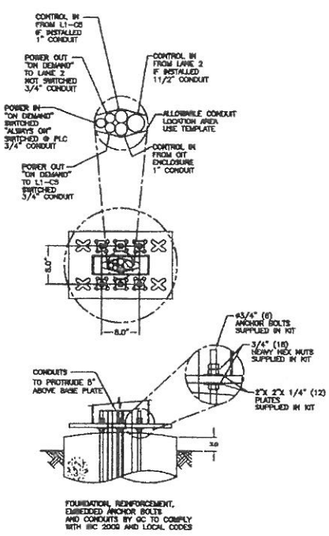

L1–OPO–4MTR

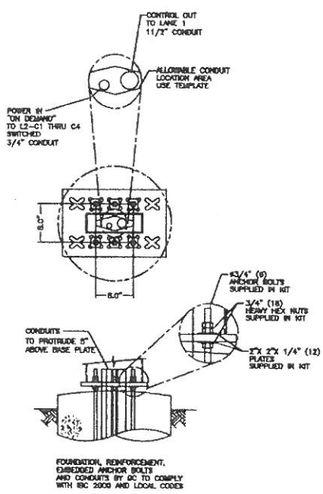

L2–OPO–4MTR
IF APPLICABLE

INSTRUCTIONS FOR OPO PRE–SELL 90, 120 AND 150 MPH APPLICATIONS

G.C. NOTES:

FOUNDATION DRAWINGS CAN BE FOUND BY ACCESSING McDONALD'S WEBSITE AT:
https://www.accessmcd.com/accessmcd/na/us/natl/restaurant_ops/usrd/design/siteplanguide.html

CONTACT FLORIDA PLASTICS INC. TO ORDER THE ANCHOR BOLT CAGE KIT AND REBAR AT 800–499–0400.

ANCHOR BOLT CAGE KIT FOR BOTH 90, 120 AND 150 MPH IS THIS SAME KIT AND THAT IS PART# OPO–1 ABK.

THE REBAR PART# BASED ON THE WIND LOAD IS DIFFERENT:
90 MPH REBAR LENGTH= 46½" PART# OP01RB905
120 MPH REBAR LENGTH= 58½" PART# OP01RB1205
150 MPH REBAR LENGTH= 70½" PART# OP01RB1505

PLEASE NOTE THAT IT IS THE INSTALLERS RESPONSIBILITY TO VERIFY THAT ALL STATE AND LOCAL CODES ARE MET. CONTACT THE LOCAL MUNICIPALITY FOR DETAILS.

ANCHOR BOLT TEMPLATE
USE THE OUTSIDE (4) HOLES FOR THESE APPLICATIONS ONLY

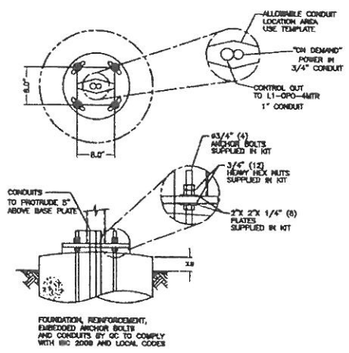

L1–OPO–1MTR

FLORIDA PLASTICS INTERNATIONAL, INC.
10200 SOUTH KEDZIE AVE.
EVERGREEN PARK, IL 60805
(708) 499–0400 FAX (708) 499–4620

Rev:	DESCRIPTION:
A	INITIAL RELEASE
J	ADDED "IBC 2006/2009" DESIGN NOTE
K	UPDATED FOUNDATION & WINDLOAD SPEC

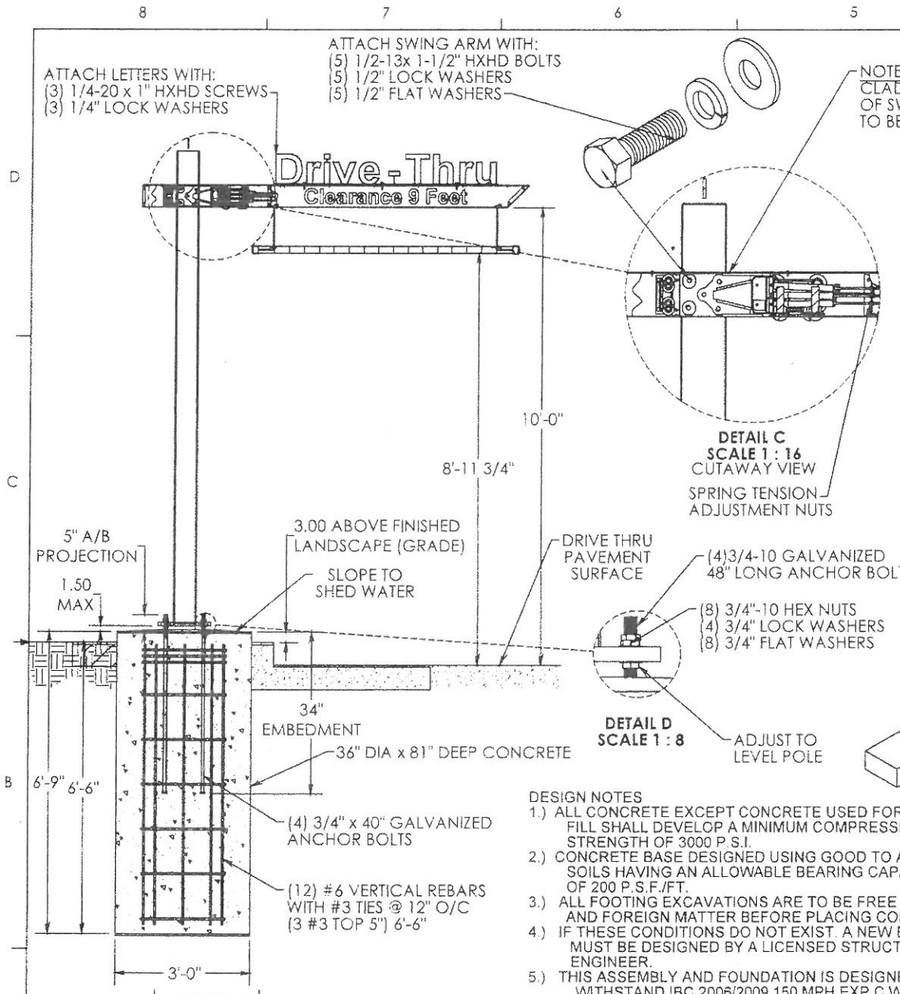

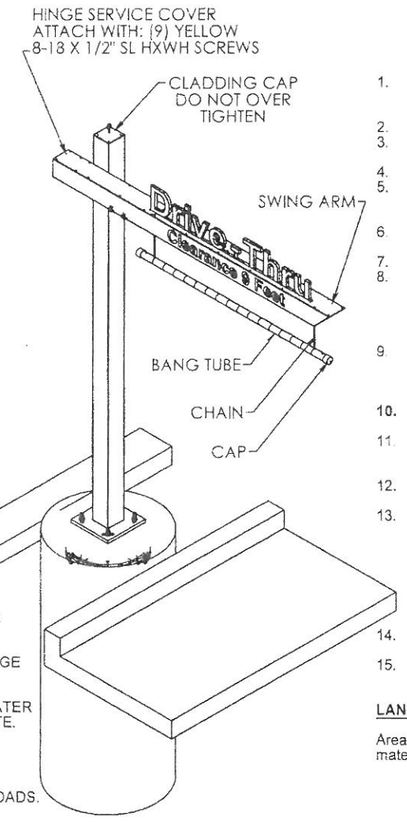

DESIGN NOTES

1.) ALL CONCRETE EXCEPT CONCRETE USED FOR BACK FILL SHALL DEVELOP A MINIMUM COMPRESSIVE STRENGTH OF 3000 P.S.I.

2.) CONCRETE BASE DESIGNED USING GOOD TO AVERAGE SOILS HAVING AN ALLOWABLE BEARING CAPACITY OF 200 P.S.F./FT.

3.) ALL FOOTING EXCAVATIONS ARE TO BE FREE OF WATER AND FOREIGN MATTER BEFORE PLACING CONCRETE.

4.) IF THESE CONDITIONS DO NOT EXIST. A NEW BASE MUST BE DESIGNED BY A LICENSED STRUCTURAL ENGINEER.

5.) THIS ASSEMBLY AND FOUNDATION IS DESIGNED TO WITHSTAND IBC 2006/2009 150 MPH EXP C WIND LOADS.

INSTALLATION INSTRUCTIONS

1. STAKE FOUNDATION AREA AND CONFIRM GRADE REQUIREMENTS WITH G. C. (TOP OF FOUNDATION IS 3" ABOVE LAND
2. EXCAVATE FOUNDATION AREA.
3. POUR FOUNDATION (36" DIA. x 81" DEPTH) ANCHOR BOLTS **(PER FIGURE 1)**.
4. ALLOW CONCRETE CURE TIME AS REQUIR
5. PLACE (4) Ø3/4" LEVELING NUTS AND WAS FOUR ANCHOR BOLTS TO PROVIDE A 1.5 THE FOUNDATION AND BASE PLATE OF
6. POSITION THE POLE ONTO THE ANCHOR E PLACE WITH (8) Ø3/4" NUTS AND WASHE
7. LEVEL POLE BY ADJUSTING THE 3/4" NUTS
8. INSTALL SWING ARM **(SEE DETAIL C)** IN TC **(DO NOT TIGHTEN YET)**
   USING: (5) 1/2-13 X 1-1/2" HEX BOLTS
   (5) 1/2" FLAT WASHERS
   (5) 1/2" LOCK WASHERS
9. ATTACH "DRIVE-THRU" LETTERS TO TOP C **(LETTERS MUST BE ATTACHED FOR I**
   USING: (3) 1/4-20 X 1" SCREW
   (3) 1/4" LOCK WASHER
10. LEVEL SWING ARM **(LIFT OVER LEVEL TIGI** LET ARM HANG - CHECK LEVEL - ADJUS
11. ADJUST SPRING TENSION AS NEEDED TO BY ADJUSTING THE 1/4-20 NUTS ON THE TIGHTEN JAM NUTS SECURELY WHEN D
12. INSTALL CLADDING PER INSTRUCTIONS IN **SEE NOTE 1 CLADDING CUTOUT CLEAR**
13. ADJUST THE HEIGHT OF THE BANG TUBE **9 FEET** ABOVE THE DRIVE PAV
    13.1 REMOVE CAPS ON BANG TUB
    13.2 LIFT TUBE TO CREATE SLACK
    13.3 PULL CHAIN OUT OF END OF
    13.4 MOVE COTTER PIN UP OR DO
    13.5 LET TUBE HANG - CHECK HEI
    13.5 REPLACE CAPS ON ENDS OF
14. INSTALL HINGE SERVICE COVER - ATTACH (9) YELLOW 8-18 X 1/2" SL HXWH SCRE
15. TOUCH UP POLE AND SWING ARM WITH P

LANDSCAPE NOTE:

Area above the base plate is to remain exposed. No s material should be placed on top of the base plate.

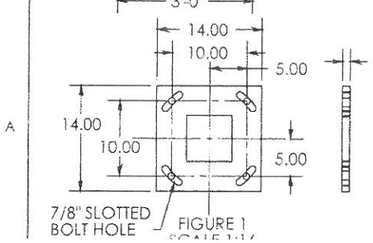

FIGURE 1

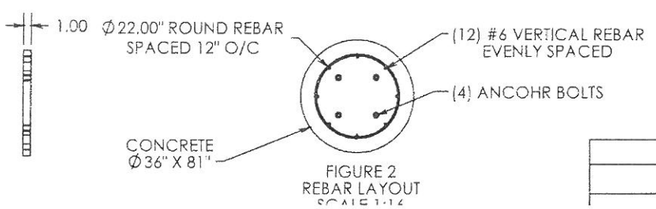

FIGURE 2
REBAR LAYOUT

UNLESS OTHERWISE SPECIFIED:		NAME	DATE	PRODUCT:
DIMENSIONS ARE IN INCHES TOLERANCES FRACTIONAL ± 1/8 X = ± .06 XXX = ± .015 ANGULAR: MACHINED ± 5°	▱ .010 XX = ± .03 XXXX = REAM BEND ± 1°	DRAWN	TRS	12/7/07	WPG ELEM w/ 10" x 10
		CHECKED			
		DESIGNED	TRS	12/7/07	
		CustServ			TITLE: WPG V INSTALL
FINISH		ENG APPR.			

Everbrite Identity Systems Division

PROPRIETARY AND CONFIDENTIAL
THE INFORMATION CONTAINED IN THIS DRAWING IS THE SOLE PROPERTY OF EVERBRITE, LLC. ANY REPRODUCTION

SIZE B | DWG. IN449

012 S:\Secure\ISD\Engineering\Drawings\1 Production Released Drawings\Signature Elements\WPG\IN449186S-REV K

ITEM NO.	PART NUMBER	DESCRIPTION	QTY.
1	SU693860S	ASSY,MCD SP WPG CLAD BOT W/ COV	1
2	RI002100	RIVET, 1/8X5/16 MULTIGRIP AL/S	24
3	FM491900S	FAB,SP WPG BRACKET	2
4	SU693790S	ASSY, MCD SP WPG CLADDING MID	2
5	SU693770S	ASSY, MCD SP WPG CLADDING TOP	1
6	FM489331S	FAB, WPG CLAD TOP BACK SS	1
7	FM489341S	FAB, WPG CLAD MIDDLE BACK SS	2
8	FM489351S	FAB, WPG CLAD BOTTOM BACK SS	1
9	FM489361S	FAB, WPG CLAD TOP CAP	1
10	HM066690S	KIT, HANGING MATERIAL	1
11	LA331901S	LABEL, EB IN NON-ELEC CHINA	1
12	LA33100S	LABEL, CLADDING SERVICE	1
13	PL231651S	PLATE, WPG CLAD CAVIAR BACK SS	1

Rev:	DESCRIPTION:
A	INITIAL RELEASE
B	BOM RESTRUCTURED
C	CHANGED STEP (1)
D	CHANGED LABEL

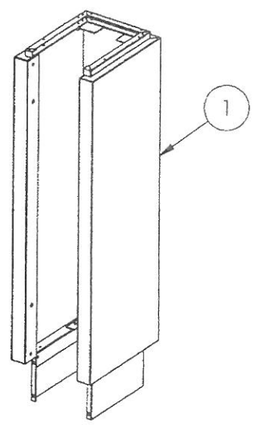

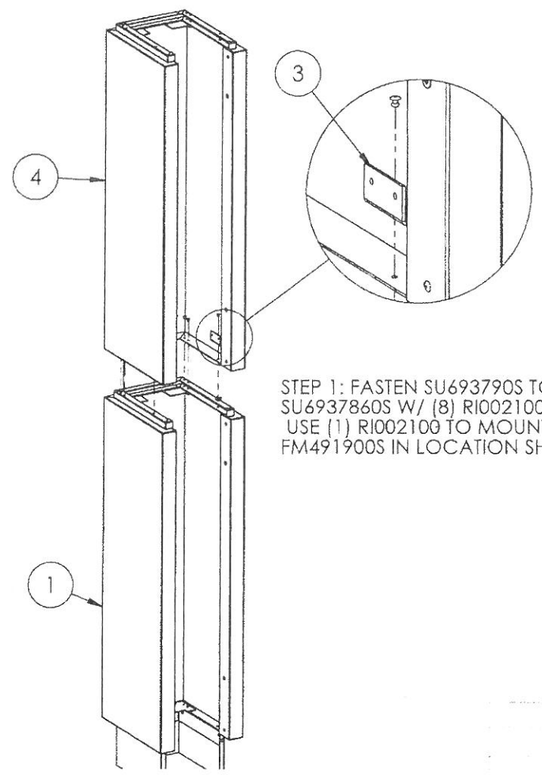

STEP 1: FASTEN SU693790S TO TOP OF SU6937860S W/ (8) RI002100, USE (1) RI002100 TO MOUNT FM491900S IN LOCATION SHOWN

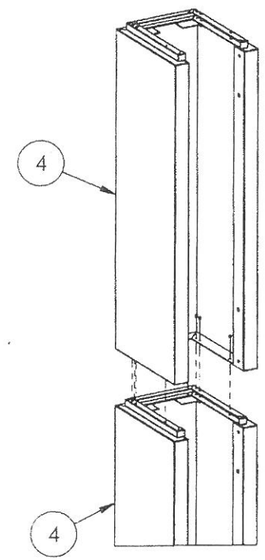

STEP 2: FASTEN ANOTHER SU69790S TO TOP OF SU693790S USING (8) RI002100 AS SHOWN

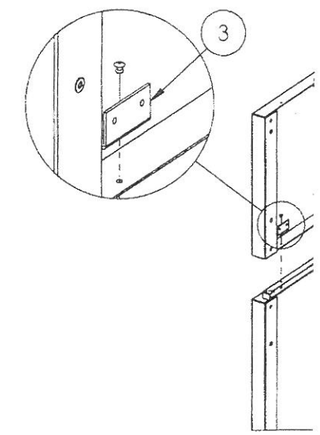

STEP 3: FASTEN
SU693790S W/ (
RI002100 TO M(
LOCATION SHC

UNLESS OTHERWISE SPECIFIED.
DIMENSIONS ARE IN INCHES
TOLERANCES:
FRACTIONAL ± 1/8
.X = ± .06 .XX = ± .03
.XXX = ± .015 .XXXX = REAM
ANGULAR:
MACHINED ± .5 BEND ± 1
FINISH

	NAME	DATE
DRAWN	ADR	07/30/10
CHECKED		
DESIGNED		
CUSTOMER SERV.		
ENG APPR.		

PRODUCT:
WPG CLA
(GLOBALL

TITLE: SP WP
(SHEET STO

Everbrite
Identity Systems Division

PROPRIETARY AND CONFIDENTIAL
THE INFORMATION CONTAINED IN THIS DRAWING IS THE SOLE PROPERTY OF EVERBRITE, LLC. ANY REPRODUCTION

SIZE B DWG. KT2

2010 S:\secure\ISD\Engineering\Drawings\1 Production Released Drawings\Signature Elements\Cladding\WPG Cladding\Sheet Stock Version WPG\KT225020S REV-D

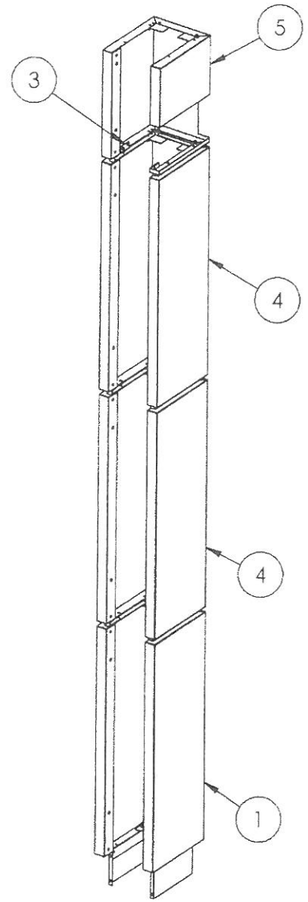

FINAL ASSEMBLED VIEW

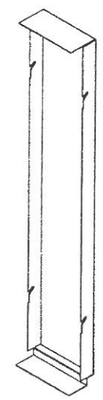

FM489341S - MIDDLE BACK PANEL
(2) REQ'D

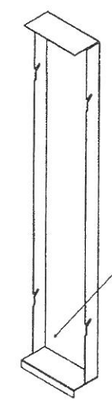

FM489351S - BOTTOM BACK PANEL
(1) REQ'D

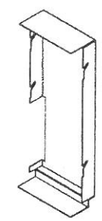

FM489331S - TOP BACK PANEL
(1) REQ'D

PL231651S - BOTTOM CAVIAR BACK PANEL
(1) REQ'D

ALSO PACK:
HM066690S - SP WPG CLADDING HANGING KIT

ITEMS PACKED LOOSE W/ KT224780S

UNLESS OTHERWISE SPECIFIED
DIMENSIONS ARE IN INCHES
TOLERANCES:
FRACTIONAL ± 1/8
X = ± .06 XX = ± .03
XXX = ± .015 XXXX = REAM
ANGULAR:
MACHINED ± .5 BEND ± 1
FINISH

	NAME	DATE
DRAWN	ADR	09/30/10
CHECKED		
DESIGNED		
CUSTOMER SERV		
ENG APPR		

PROPRIETARY AND CONFIDENTIAL
THE INFORMATION CONTAINED IN THIS DRAWING IS THE SOLE PROPERTY OF EVERBRITE, LLC. ANY REPRODUCTION

Everbrite
Identity Systems Division

PRODUCT:
WPG CLA
(GLOBALL

TITLE: SP WP
(SHEET STO

SIZE DWG.
B KT2

2010 S:\secure\ISD\Engineering\Drawings\1 Production Released Drawings\Signature Elements\Cladding\WPG Cladding\Sheet Stock Version WPG\KT225020S REV-D

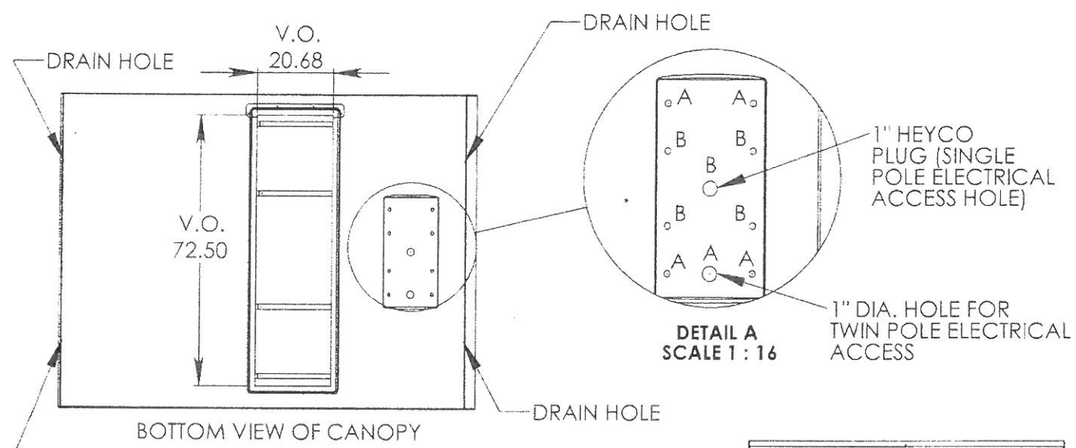

DETAIL A
SCALE 1 : 16

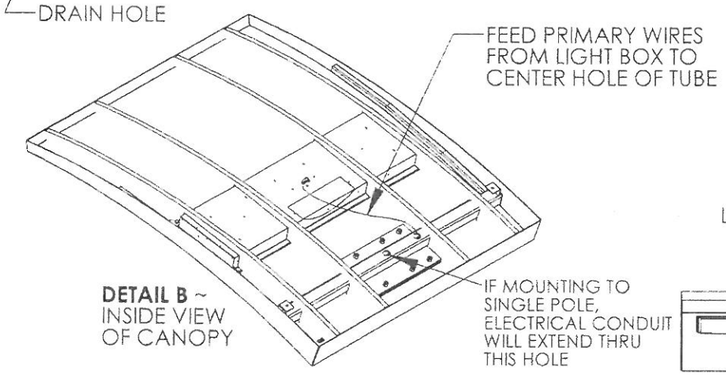

DETAIL B ~
INSIDE VIEW OF CANOPY

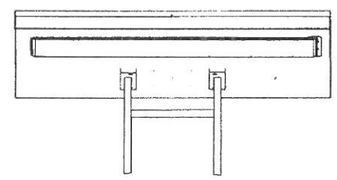

TWIN POLE CANOPY MOUNT~
HOLES IN MOUNTING PLATE TO LINE UP WITH "**A**" HOLES IN CANOPY

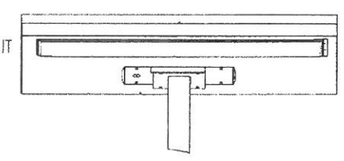

SINGLE POLE CANOPY MOUNT~
HOLES IN MOUNTING PLATE TO LINE UP WITH "**B**" HOLES IN CANOPY

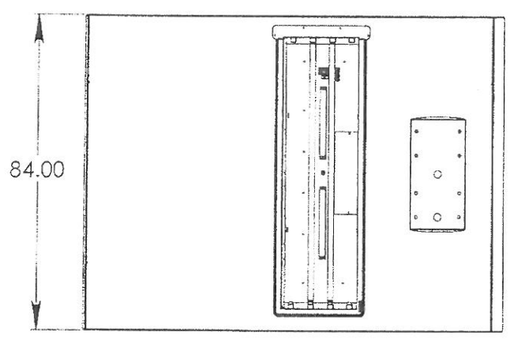

Rev:	DESCRIPTION:
A	INITIAL RELEASE (ECN-4016)
B	REVISED NOTES

INSTALLATION:

1. LIFT CANOPY USING (3) EYEBOLTS.
2. IF INSTALLING CANOPY ONTO A TWIN POLE ASSEMBLY IDENTIFIED AT LOCATIONS "A" IN DETAIL A, IF INSTALLIN SINGLE POLE ASSEMBLY, DRILL OUT HOLES AS IDENTIFIE DETAIL A. DO NOT DRILL OUT UNNECCESSARY HOLES CANOPY ON A TWIN POLE ASSEMBLY, 1" PLASTIC PLU HOLE MUST REMAIN INSTALLED.
3. RE-ROUTE ELECTRICAL CONDUIT IF MOUNTING TO A SI MUST EXTEND DOWN CENTER HOLE LABELED "B". IF MC POLE, THE CONDUIT WILL EXTEND OUT CENTER HOLE L
4. TO RE-ROUTE ELECTRICAL CONDUIT, REMOVE LARGE OF THE LIGHTBOX. LOCATE CONDUIT AND GENTLY PU HOLE TOWARDS LIGHTBOX. RE-DIRECT END OF PRIMA HOLE. REPLACE ACCESS COVER INSIDE OF LIGHTBOX
5. LIFTING CANOPY INTO PLACE, POSITION MOUNTING H OVER MOUNTING PLATE(S) ON POLE.
6. FEED PRIMARY WIRES INTO LEFT VERTICAL TUBE FOR TW KNOCK-OUT HOLE FOR SINGLE POLE.
7. INSPECT INSIDE OF 3/4" HEX NUTS ON THE CANOPY. CL FIBERGLASS IN THREADS OF NUTS USING A 3/4" TAP AS
8. SECURE CANOPY TO POLE USING (4) Ø3/4" BOLTS, LO WASHERS AND WASHERS.
9. **IMPORTANT!!! REMOVE (3)EYEBOLTS ON THE TOP O REPLACE WITH (3)1/2-13 X 1-1/2" YELLOW PAINTED BO SUPPLIED. ENSURE THAT THESE ARE TIGHT AND NO GA CANOPY AND THE WASHER. APPLY SILICONE OVER TH WASHER TO ENSURE A WEATHER TIGHT SEAL.**
10. TOUCH-UP ANY SCRATCHES WITH SUPPLIED PAINT.
11. CONNECT PRIMARY WIRES IN ACCESS HOLE NEAR THE AND SECURE HAND-HOLE COVER.
12. CLEAN SITE OF PACKAGING MATERIAL.

ELECTRICAL:
3.64 AMPS, 120 VOLTS, 60 Hz

NOTE: THIS SIGN IS INTENDED TO BE INSTALLED IN ACCORD WITH THE REQUIREMENTS OF ARTICLE 600 OF THE NATIONAL ELECTRICAL CODE AND/OR OTHER APPLICABLE LOCAL CC THIS INCLUDES THE PROPER GROUNDING OF THE SIGN.
-THIS SIGN IS UL LISTED PER UL48 SIGN STANDARDS. THIS SIG BREAKER BOX ON THE INSIDE OF THE STORE.

UNLESS OTHERWISE SPECIFIED:
DIMENSIONS ARE IN INCHES
TOLERANCES:
FRACTIONAL ± 1/8
.X = ± .06 .XX = ± .03
.XXX = ± .015 .XXXX = REAM
ANGULAR:
MACHINED ± .5 BEND ± 1
FINISH

	NAME	DATE
DRAWN	LO	12/11/13
CHECKED		
DESIGNED	LO	12/ /13
CUSTOMER SER /		
ENG APPR		

Everbrite
Identity Systems Division

PROPRIETARY AND CONFIDENTIAL
THE INFORMATION CONTAINED IN THIS DRAWING IS THE SOLE PROPERTY OF EVERBRITE, LLC. ANY REPRODUCTION

PRODUCT:
7'x9'4" FIBE
LIGHT BOX

TITLE: INSTAL

SIZE B | DWG. IN4

D14 S:\SECURE\ISD\Engineering\Drawings\1 Production Released Drawings\Signature Elements\Canopy\IN4497335 REV B

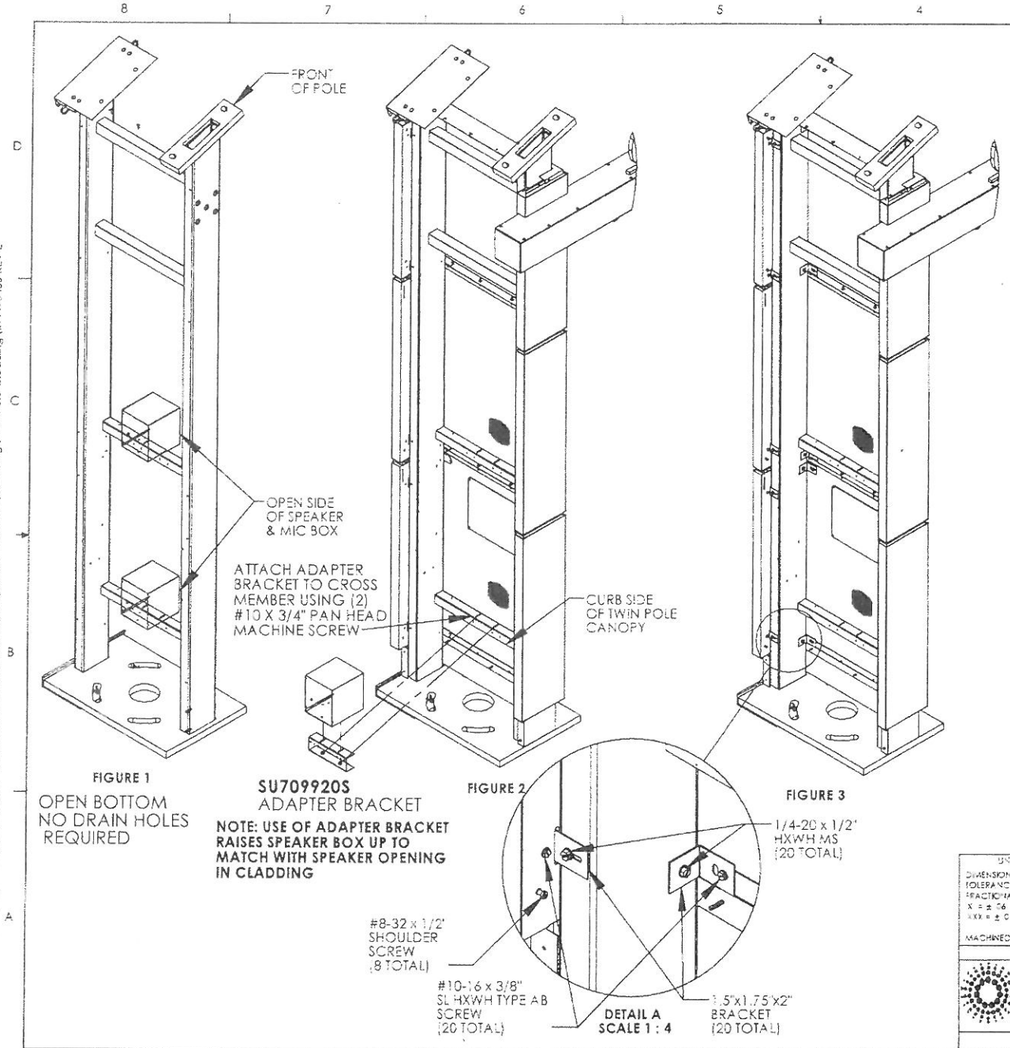

FIGURE 1
OPEN BOTTOM
NO DRAIN HOLES REQUIRED

SU709920S
ADAPTER BRACKET

NOTE: USE OF ADAPTER BRACKET RAISES SPEAKER BOX UP TO MATCH WITH SPEAKER OPENING IN CLADDING

FIGURE 2

FIGURE 3

DETAIL A
SCALE 1 : 4

Rev:	DESCRIPTION:	DATE:	APPROVED
A	INITIAL RELEASE	4/9/09	
B	ADDED SPEAKER/MIC BOXES MOUNTING STEP	17FEB11	SDS
C	REVISED STEP 1 FOR SPEAKER/MIC BOX	18FEB11	LMR
D	ADDED NOTE REGARDING DRAIN HOLES	04/16/13	RCW
E	UPDATED FOR ADAPTER BRACKET (ECN-3518)	5/16/13	LO

INSTALLATION INSTRUCTIONS

1. ATTACH SPEAKER BOX ASSEMBLY TO CROSS BAR w/ (4) #10 SCREWS
   EACH. MAKE SURE THE OPEN SIDE OF THE BOX IS TO THE FRONT OF THE POLE (TALLER SIDE) (SEE FIGURE 1).
2. SLIDE LARGE LOWER FRONT SECTION CLADDING ONTO TWIN POLE FROM THE CURB SIDE OF THE POLE, THEN PLACE THE LARGE ASSEMBLED 2 SECTION CLADDING ABOVE LOWER SECTION ON THE TWIN POLE FROM THE CURB SIDE OF THE POLE (SEE FIGURE 2).
3. SECURE CLADDING TO POLE BY HOLDING THE CURB SIDE OF THE CLADDING AGAINST THE POLE AND FASTENING THE (20)1.5"x1.75"x2" BRACKETS TO THE CLADDING AND THE POLE
   A. (10) BRACKETS ATTACH THE BACK SIDE OF THE CLADDING BY INSERTING THE BRACKET INTO THE 1.75" SLOT OF THE CLADDING AND ATTACHING THE BRACKET TO THE CLADDING WITH (10) #10-16 x 3/8 SLOTTED HXWH TYPE AB SCREWS, ATTACH THE SAME BRACKETS TO THE BACK SIDE OF THE TWIN POLE WITH (10) 1/4-20 x 1/2" SLOTTED HXWH MACHINE SCREWS.
   B. (10) BRACKETS ATTACH TO THE INSIDE FRONT OF THE CLADDING BY ATTACHING THE BRACKETS TO THE TWIN POLE WITH (10)1/4-20 x 1/2" SLOTTED HXWH MACHINE SCREWS, ATTACH THE SAME BRACKETS TO THE CORNER BRACKETS ON THE CLADDING WITH (10) #10-16 x 3/8 SLOTTED HXWH TYPE AB SCREWS.

   INSERT (8) #8-32 x 1/2" SHOULDER SCREWS INTO THE RIVUTS IN THE CLADDING (SEE FIGURE 3/DETAIL A).

4. IF REQUIRED, ATTACH ADAPTER BRACKET TO BOTTOM CROSS MEMBER AND SECURE USING (2) #10 X 3/4" PH PAN HEAD MACHINE SCREWS. THIS BRACKET WILL ALIGN THE SPEAKER BOX WITH THE OPENING IN THE CLADDING.
5. SECURE SPEAKER BOX TO TOP OF ADAPTER BRACKET.

UNLESS OTHERWISE SPECIFIED
DIMENSIONS ARE IN INCHES
TOLERANCES:
FRACTIONAL ± 1/8
X = ± .06 XX = ± .03
XXX = ± 0.15 XXXX = PEAK
ANGULAR
MACHINED ± .5 BEND ± 1
FINISH

	NAME	DATE
DRAWN	STILES	4/9/09
CHECKED		
DESIGNED	RAK	
CUSTOMER SERV.		
ENG APPR.		

PRODUCT: McDONALD'S ARCADE BUILDING

TITLE: TWIN POLE CLADDING ACM REVEAL II

Everbrite
Identity Systems Division

PROPRIETARY AND CONFIDENTIAL
THE INFORMATION CONTAINED IN THIS DRAWING IS THE SOLE PROPERTY OF EVERBRITE, LLC. ANY REPRODUCTION IN PART OR AS A WHOLE WITHOUT THE WRITTEN PERMISSION OF EVERBRITE, LLC IS STRICTLY PROHIBITED.

DO NOT SCALE DRAWING

SIZE	DWG. NO.	REV
B	IN449340S	E

SCALE: 1:16 TYPE: INSTALL SHEET 1 OF 2

5/16/2013 S:\secure\ISD\Engineering\Drawings\1 Production Released Drawings\Signature Elements\Cladding\Twin Pole Cladding\IN449340S REV E

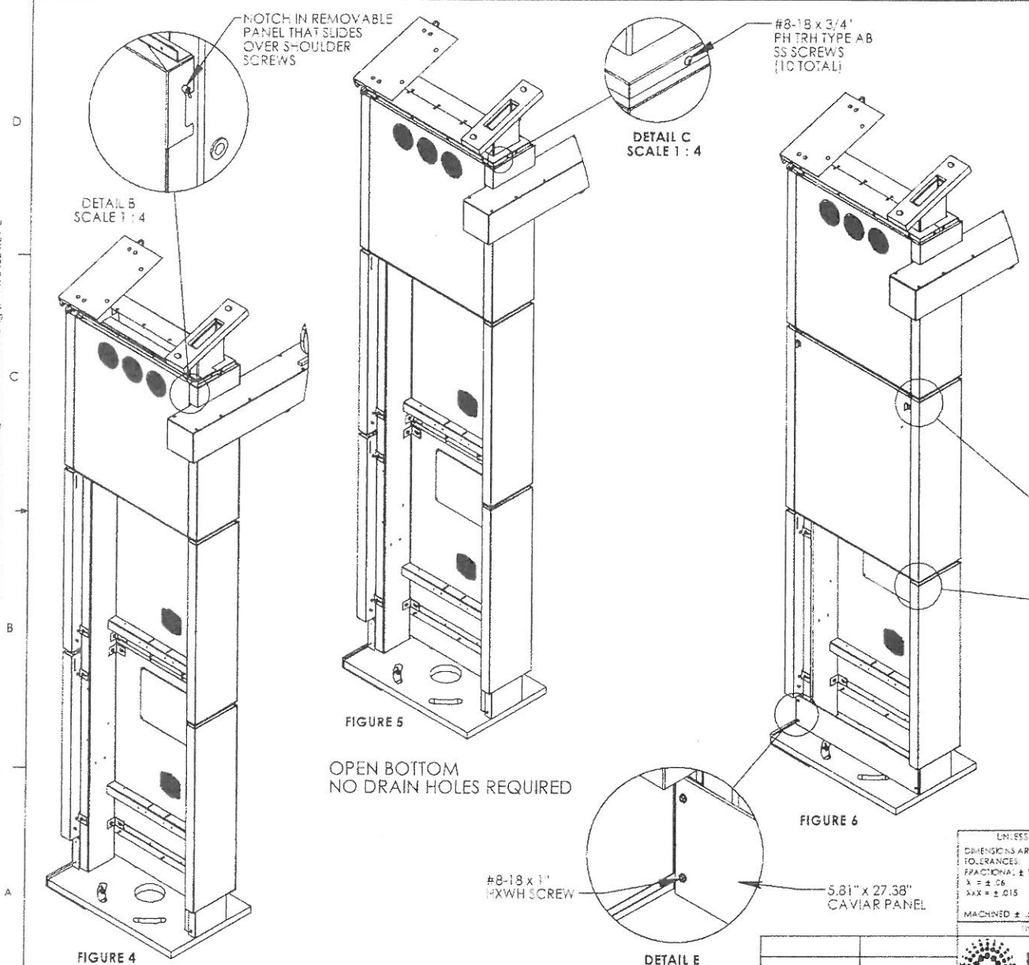

INSTALLATION INSTRUCTIONS CONTINUED

4. SLIDE TOP REMOVABLE PANEL OVER TOP (4) SHOULDER SCREWS. MAKE SURE THE PANEL IS FLUSH WITH THE TOP OF THE CLADDING TO ENSURE PROPER INSTALLATION (SEE FIGURE 4/DETAIL B).
5. ATTACH TOP ACM PIECE TO BRACKET AND CLADDING WITH (10) #8-15 x 1.5" PH PAN TYPE A SCREWS (SEE FIGURE 5/DETAIL C).
6. SLIDE MIDDLE REMOVABLE PANEL ONTO (2) SHOULDER SCREWS IN THE MIDDLE SECTION OF CLADDING IN THE SAME WAY THE TOP PANEL WAS ATTACHED, PUSH TOP PORTION OF THE MIDDLE REMOVABLE PANEL INTO CLOSED POSITION AND TURN (2)LOCKS 1/4 TURN TO FULLY ENGAGE. CHECK THAT BOTTOM OF PANEL IS FLUSH WITH BOTTOM OF CLADDING TO ENSURE PROPER INSTALLATION (SEE FIGURE 6/DETAIL D).
7. SLIDE LOWER REMOVABLE PANEL ONTO (2) SHOULDER SCREWS IN THE LOWER SECTION OF CLADDING IN THE SAME WAY THE TOP PANEL WAS ATTACHED, PUSH TOP PORTION OF THE LOWER REMOVABLE PANEL INTO CLOSED POSITION AND TURN (2)LOCKS 1/4 TURN TO FULLY ENGAGE. CHECK THAT BOTTOM OF PANEL IS FLUSH WITH BOTTOM OF CLADDING TO ENSURE PROPER INSTALLATION (SEE FIGURE 6/DETAIL D).
8. ATTACH CAVIAR PANEL (5.81" x 27.38") AT BOTTOM OF CLADDING WITH (4) #8-18 x 1" HEX HEAD TEK SCREWS (SEE FIGURE 6/DETAIL E).
9. REMOVE ALL PACKAGING MATERIAL FROM THE SITE AND GIVE THE INSTALLATION INSTRUCTIONS TO STORE PERSONNEL.

RELATED INSTALLATION DOCUMENTS

TWIN POLE	IN449131S
SWING ARM	IN449138S
CANOPY	IN449207S
LCD	IN449224S
LED	IN449220S

UNLESS OTHERWISE SPECIFIED
DIMENSIONS ARE IN INCHES
TOLERANCES:
FRACTIONAL ± 1/8
X.X ± .06 XX ± .03
XXX ± .015 XXXX ± REAM
ANGULAR
MACHINED ± .5 BEND ± 1
FINISH

	NAME	DATE
DRAWN	STEB	4/9/09
CHECKED		
DESIGNED	RAK	
CUSTOMER SERV.		
ENG APPR.		

PROPRIETARY AND CONFIDENTIAL
THE INFORMATION CONTAINED IN THIS DRAWING IS THE SOLE PROPERTY OF EVERBRITE, LLC. ANY REPRODUCTION IN PART OR AS A WHOLE WITHOUT THE WRITTEN PERMISSION OF EVERBRITE, LLC IS STRICTLY PROHIBITED

Everbrite
Identity Systems Division

NEXT ASSY | USED ON
APPLICATION
DO NOT SCALE DRAWING

PRODUCT: McDONALD'S ARCADE BUILDING
TITLE: TWIN POLE CLADDING ACM REVEAL II

SIZE	DWG. NO.	REV
B	IN449340S	E

SCALE: 1:16 | TYPE: INSTALL | SHEET 2 OF 2

3/16/2013 S:\secure\USN\Engineering\Drawings\1 Production Released Drawings\Signature Elements\Cladding\Twin Pole Cladding\IN449340S REV E

Rev:	DESCRIPTION:	DATE:	REV'D BY:	INCIDENT:
A	INITIAL RELEASE	2/2/07	A	
C	REVISED INSTALLATION ORDER	24OCT13	RCW	111499

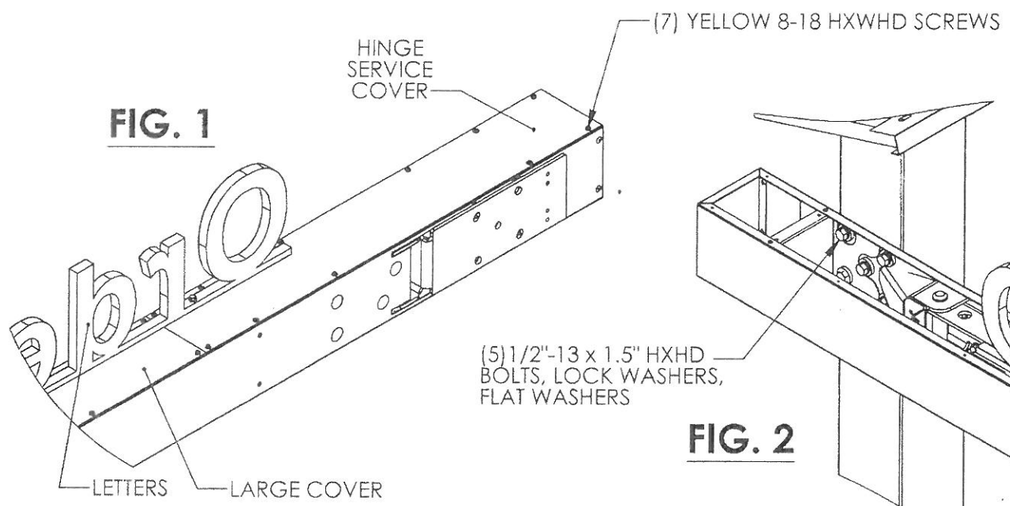

FIG. 1

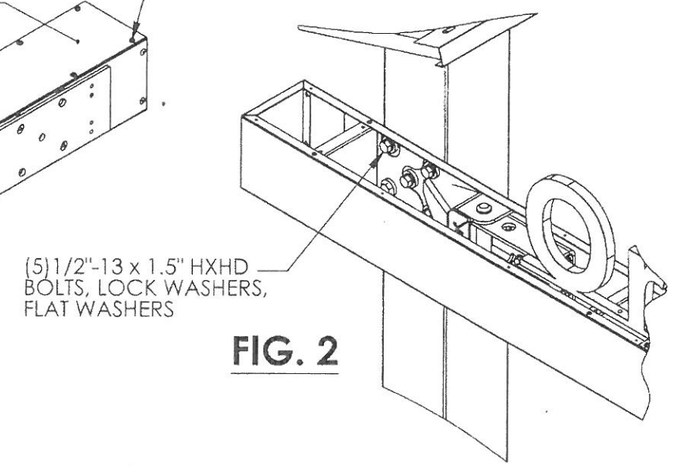

FIG. 2

SWING ARM INSTALLATION

1. REMOVE HINGE SERVICE COVER **(SEE FIG.1)**
   (ARM IS SHIPPED WITHOUT LETTERS ATTACHED)
2. LIFT ARM TO POSITION ON POLE
3. MOUNT ARM THROUGH THE **(5)** HOLES INSIDE THE ARM TO THE TAPPED HOLES IN THE POLE **(SEE DETAIL A)**
   (START WITH CENTER BOLT SEE FIG.2) (DO NOT TIGHTEN SECURELY)
   USING: **(5)** 1/2-13 X 1.5" HXHD BOLTS
   (5) 1/2" LOCK WASHERS
   (5) 1/2" FLAT WASHERS
4. ENSURE ARM IS LEVEL
5. IF LEVEL- SECURELY TIGHTEN THE **(5)** MOUNTING BOLTS **(SEE FIG.2)** AND **(SKIP STEP 6)**
6. IF NOT LEVEL - 8.1 LIFT ARM OVER LEVEL
   8.2 TIGHTEN THE (5) BOLTS
   8.3 LET ARM HANG
   8.4 CHECK LEVEL AGAIN
   8.5 ADJUST AS NECESSARY
7. CHECK ARM MOTION BY ROTATING ARM; LOOKING FOR SMOOTH OPERATION
8. CHECK SPRING TENSION ON SWING ARM HINGE BY ROTATING ARM APPROXIMATELY 3 FEET AND RELEASING: ARM MUST RETURN TO POSITION
   (IF IT DOES NOT RETURN TO POSITION; ADD LIGHT OIL TO HINGE)
9. TO ADJUST SPRING TENSION, ADJUST THE 1/4-20 NUTS ON THE **(3)** EYEBOLTS **(TIGHTEN SECURELY)**
10. SET LETTERS ON TOP OF ARM - ALIGN WITH THE (2) RIVNUTS IN LARGE COVER
11. START THE RIGHT **(2)** SCREWS **(SEE FIG.3) (LEAVE LOOSE)**
    USING: **(2)** 1/4-20 X 1 HXHD MS
    (2) 1/4" LOCK WASHERS
12. INSTALL HINGE SERVICE COVER BY SLIDING IT UNDER THE LETTERS AND INSTALLING WITH:
    (7) YELLOW 8-18 X .5" HXWHD SCREWS
13. SECURE THE LETTERS - INSTALL **(1)** 1/4-20 X 1" SCREW AND **(1)** 1/4" LOCK WASHER TO THE LEFT MOUNTING HOLE **(SEE FIG.3)**
    (MUST LINE UP WITH THE RIVNUT IN HINGE SERVICE COVER)
14. SECURELY TIGHTEN ALL **(3)** 1/4-20 SCREWS ON THE LETTERS
15. TOUCH UP AS NEEDED WITH PAINT SUPPLIED

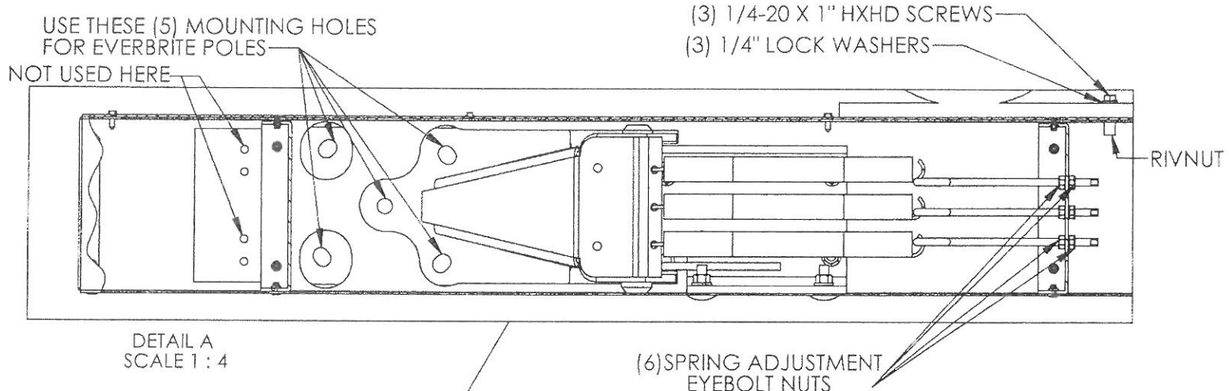

DETAIL A
SCALE 1 : 4

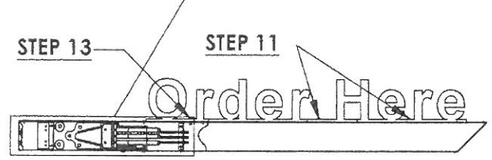

FIG. 3

UNLESS OTHERWISE SPECIFIED:
DIMENSIONS ARE IN INCHES
TOLERANCES:
FRACTIONAL ± 1/8
.X = ± .06 .XX = ± .03
.XXX = ± .015 .XXXX = REAM
ANGULAR: MACHINED ± .5 BEND ± 1

	NAME	DATE
DRAWN	RS	2/2/07
CHECKED		
DESIGNED	RS	2/2/07

PROPRIETARY AND CONFIDENTIAL

THE INFORMATION CONTAINED IN THIS DRAWING IS THE SOLE PROPERTY OF EVERBRITE, LLC. ANY REPRODUCTION IN PART OR AS A WHOLE WITHOUT THE WRITTEN PERMISSION OF EVERBRITE, LLC IS STRICTLY PROHIBITED.

Everbrite
Identity Systems Division

DO NOT SCALE DRAWING

PRODUCT:
McDONALD'S
HI IMPACT
TWIN ~ SINGLE POLE SWING ARM

TITLE:
TWIN ~ SINGLE POLE SWING ARM
INSTALL

SIZE B | DWG. NO. IN449138S | REV C

SCALE: 1:24 | SHEET 1 OF 1

11/19/2013 S:\secure\SID\Engineering\Drawings\1 Production Released Drawings\Signature Elements\Swing Arm\IN449138S REV C

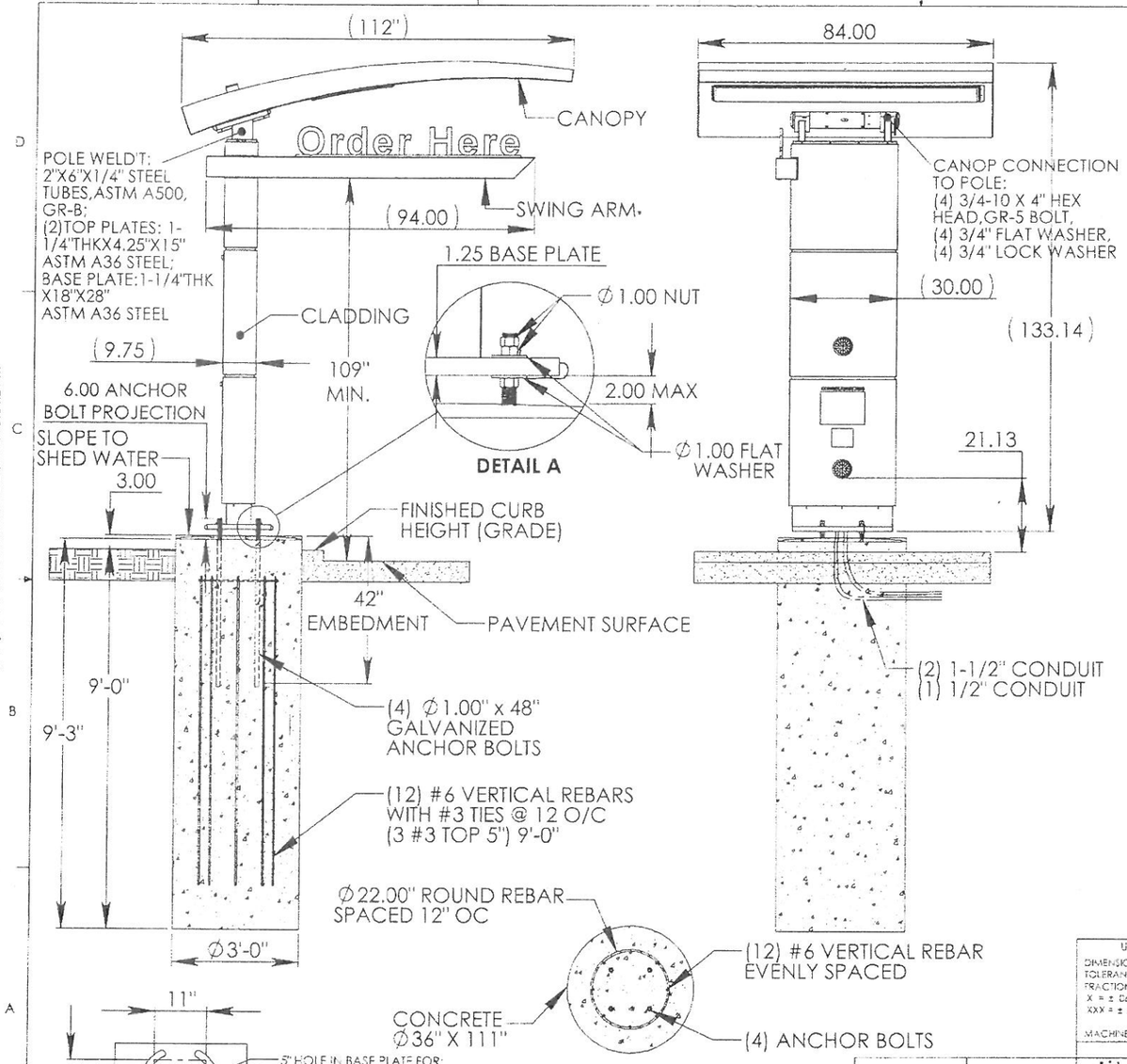

FIGURE 1
BOLT PATTERN

FIGURE 2
REBAR LAYOUT

Rev:	DESCRIPTION:	DATE:	APPROVED:
A	INITIAL RELEASE	16FEB07	
L	UPDATED FOUNDATION	08/08/12	JTW
M	UPDATED IBC CODE NOTE (ECN-4097)	02/21/14	MMD

INSTALLATION INSTRUCTIONS:

1. STAKE FOUNDATION AREA AND CONFIRM FINAL GRADE REQUIREMENTS WITH G. C. (TOP OF FOUNDATION IS 3" ABOVE CURB (GRADE)
2. EXCAVATE FOUNDATION AREA.
3. POUR FOUNDATION (Ø36" x 111" DEPTH, OR 72" SQUARE x 32" DEEP) INSERT (4) Ø1.00 x 48" ANCHOR BOLTS AND (12) #6 VERTICAL REBARS WITH #3 TIES @ 12 O/C (**PER FIGURE 1**).
4. ALLOW CONCRETE CURE TIME AS REQUIRED
5. PLACE (4) Ø1.00" LEVELING NUTS AND WASHERS ON THE FOUR ANCHOR BOLTS TO PROVIDE A 2.00" GAP BETWEEN THE FOUNDATION AND BASE PLATE OF THE POLE. (**SEE DETAIL A**).
6. POSITION THE POLE ONTO THE ANCHOR BOLTS AND SECURE IN PLACE WITH (8) Ø1.00" NUTS AND WASHERS, (**SEE DETAIL A**).
7. LEVEL POLE BY ADJUSTING THE 1" NUTS (**SEE DETAIL A**).
8. INSTALL CANOPY PER CANOPY INSTALL SHEET (**IN449207S**), USE TWIN POLE MOUNTING HOLES ONLY.
9. INSTALL SWING ARM PER SWING ARM INSTALL SHEET (**IN449138S**).
10. INSTALL CLADDING PER INSTRUCTIONS INCLUDED WITH THE CLADDING.
11. INSTALL COD UNIIT PER INSTRUCTIONS INCLUDED WITH THE COD UNIT.
12. TOUCH UP POLE, CANOPY AND SWING ARM WITH SUPPLIED PAINT.
13. CLEAN SITE OF PACKAGING MATERIAL

ELECTRICAL:
CANOPY: 3.64 AMPS, 120VOLTS, 60Hz
LED COD: 1.5 AMPS, 120VOLTS, 60Hz
LCD COD: 2.0 AMPS, 120VOLTS, 60 Hz

NOTE: THIS SIGN IS INTENDED TO BE INSTALLED IN ACCORDANCE WITH THE REQUIREMENTS OF ARTICLE 600 OF THE NATIONAL ELECTRICAL CODE AND/OR OTHER APPLICABLE LOCAL CODES. THIS INCLUDES THE PROPER GROUNDING OF THE SIGN.

DESIGN NOTES

1. ALL CONCRETE EXCEPT CONCRETE USED FOR BACK FILL SHALL DEVELOP A MINIMUM COMPRESSIVE STRENGTH OF 3000 P.S.I.
2. CONCRETE BASE DESIGNED USING GOOD TO AVERAGE SOILS HAVING AN ALLOWABLE BEARING CAPACITY OF 200 P.S.F./FT.
3. ALL FOOTING EXCAVATIONS ARE TO BE FREE OF WATER AND FOREIGN MATTER BEFORE PLACING CONCRETE.
4. IF THESE CONDITIONS DO NOT EXIST, A NEW BASE MUST BE DESIGNED BY A LICENSED STRUCTURAL ENGINEER.
5. THIS ASSEMBLY AND FOUNDATION IS DESIGNED TO WITHSTAND IBC 2012 170 MPH RISK CATEGORY II EXPOSURE C WIND LOADS.

LANDSCAPE NOTE:
AREA ABOVE THE BASE PLATE IS TO REMAIN EXPOSED. NO SHROUD OR LANDSCAPE MATERIAL SHOULD BE PLACED ON TOP OF THE BASE PLATE.

UNLESS OTHERWISE SPECIFIED:
DIMENSIONS ARE IN INCHES
TOLERANCES:
FRACTIONAL ± 1/8
X = ± .06 XX = ± .03
XXX = ± .015 XXXX = BEAM
ANGULAR:
MACHINED ± .5 BEND ± 1
FINISH

	NAME	DATE
DRAWN	LMR	10FEB07
CHECKED		
DESIGNED	TRS	12/12/06
CUSTOMER SERV		
ENG APPR		

NEXT ASSY | USED ON
APPLICATION
DO NOT SCALE DRAWING

Everbrite
Identity Systems Division

PROPRIETARY AND CONFIDENTIAL
THE INFORMATION CONTAINED IN THIS DRAWING IS THE SOLE PROPERTY OF EVERBRITE, LLC. ANY REPRODUCTION IN PART OR AS A WHOLE WITHOUT THE WRITTEN PERMISSION OF EVERBRITE, LLC IS STRICTLY PROHIBITED.

PRODUCT: McDONALD'S
ARCADE BUILDING
TWIN POLE w/ FIBERGLASS CANOPY

TITLE: INSTALL INSTRUCTIONS

SIZE	DWG. NO.	REV
B	IN449131S	M
SCALE: 1:32	TYPE: INSTALL	SHEET 1 OF 1

5/21/2014 S:\SECURE\BD\Engineering\Drawings\1 Production Released Drawings\Signature Elements\Twin Pole\IN449131S REV M

OPO Outdoor Menu Board

Everbrite
Identity Systems Division

Illumination: LED

Electrical: First Circuit: 120/1/60, 15 amp
Second Circuit: 120/1/60,15 amp

Ship Weight: 1,313 lbs.

Other:

- Please call IMS for graphics, 800-937-7671
- Triangular design for increased graphic options
- Available in an manual or automated version.
  Automated version must be ordered directly from Florida Plastics.

Everbrite, LLC, 315 Marion Ave., South Milwaukee, WI, 53172 P: 888-857-4078 F: 877-430-7363 www.everbrite.com

MOUNTING TO WOOD, EIFS AND TILE

Rev:	DESCRIPTION:	DATE:	APPROVED:
A	INITIAL RELEASE	3/21/12	LO
B	INITIAL RELEASE	05/03/12	RCW
C	INSTALL INSTRUCTIONS AND NOTES WERE UPDATED	06/11/12	RCW
D	INSTALL INSTRUCTIONS UPDATED TO INCLUDE MOUNTING TO EIFS AND TILE	07/05/12	RCW
E	INSTALL INSTRUCTIONS AND NOTES WERE UPDATED	03/18/14	GAL

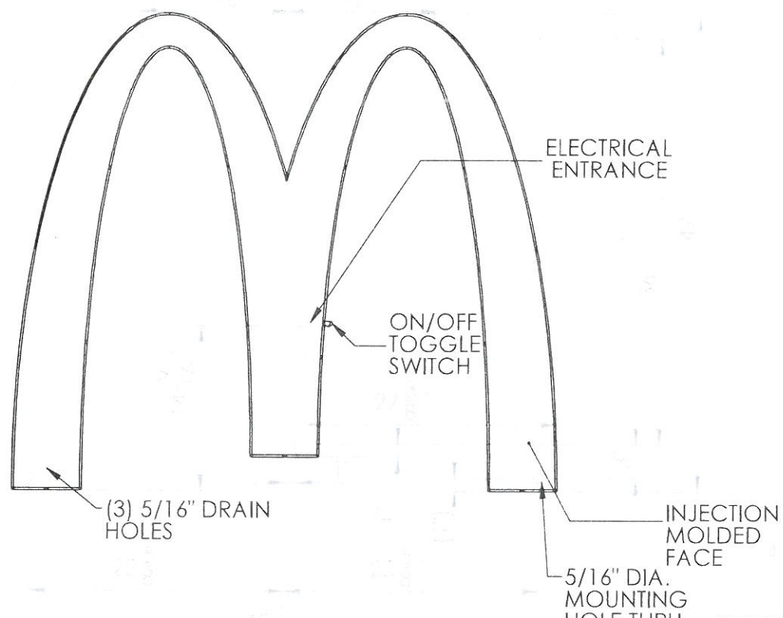

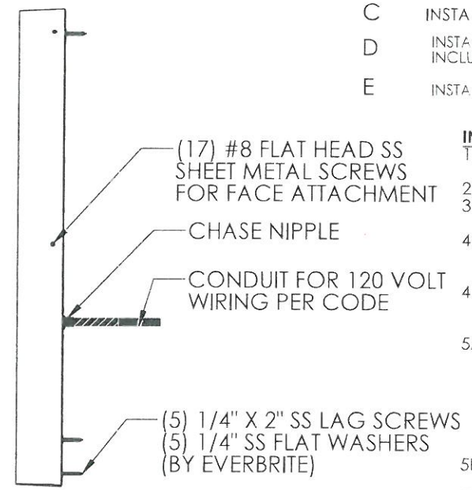

REFERENCE MCMASTER PART NUMBER:
5038K12 - 3/8" X 72" SCHEDULE 40 ALUMINUM PIPE)

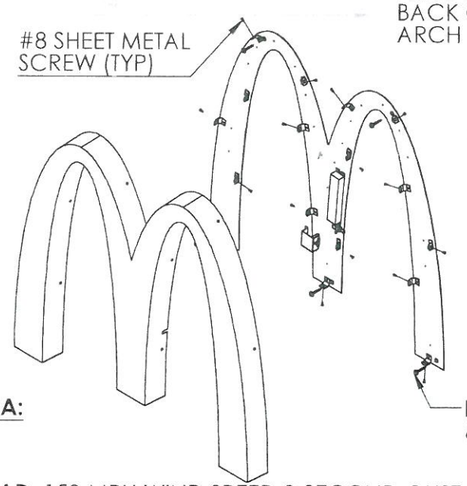

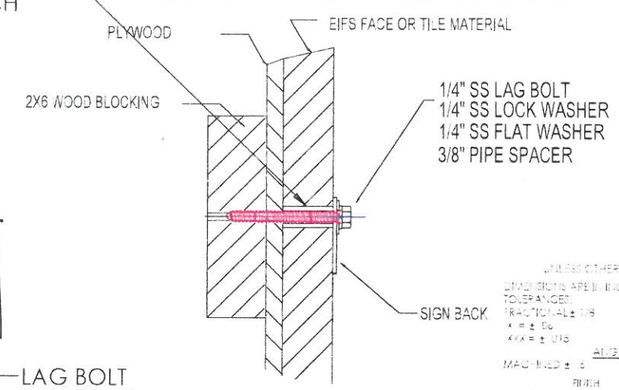

INSTALLATON INSTRUCTIONS:

1. REMOVE FACE BY REMOVING (17) #8 PHILLIPS FLAT HEAD SCREWS AROUND PERIMETER OF FACE. PULL FACE OFF OF BACK.
2. POSITION AS REQUIRED, MARK MOUNTING AND CABLE LOCATIONS.
3. IF EIFS IS PRESENT GO TO STEP 4. IF TILE IS PRESENT GO TO STEP 5. IF WOOD IS PRESENT GO TO STEP 6.

4A. USING A HOLE SAW, DRILL A 1" DIA. HOLE OUT OF THE EIFS WHERE EACH MOUNTING LOCATION IS MARKED. DRILL THIS HOLE ONLY AS DEEP AS THE EIFS IS THICK.

4B. DRILL PROPER PILOT HOLES FOR THE LAG BOLTS THROUGH THE PLYWOOD BACKING AND WOOD BLOCKING. GO TO STEP 5C

5A. USING CARBIDE TIPPED MASONRY DRILL BITS, DRILL 1" DIA. HOLES OUT OF THE TILE WHERE EACH MOUNTING LOCATION IS MARKED. DRILL THE HOLES SLOWLY WITH LIGHT PRESSURE AND SPRAY WATER CONSTANTLY ON THE TILE TO KEEP THE BIT COOL. DON'T STOP THE BIT WHILE TURNING IN THE HOLE OR IT COULD BIND AND CRACK THE TILE.

5B. DRILL PROPER PILOT HOLES FOR THE LAG BOLTS THROUGH THE PLYWOOD BACKING AND WOOD BLOCKING.

5C. USING ALUMINUM HOLLOW PIPE WITH A MINIMUM INSIDE DIAMETER OF .493", (REFERENCE MCMASTER PART NUMBER: 5038K12 - 3/8" X 72" SCHEDULE 40 ALUMINUM PIPE) CUT PIPE SECTIONS THAT HAVE A LENGTH EQUAL TO THE THICKNESS OF THE TILE OR EIFS PLUS 1/8".

6. PRE-DRILL HOLES IN WALL FOR THE 1/4" LAG BOLTS.
7. DRILL CLEARANCE HOLE FOR THE CABLE AND FITTING.
8. MAKE FINAL ELECTRICAL CONNECTIONS. IF ELECTRICAL IS NOT PROVIDED CONTACT EVERBRITE. (NOTE: BE SURE TO PUSH WIRE BACK THROUGH THE CONDUIT BEFORE ATTACHING SIGN TO THE WALL.)
9. TEST LIGHT. TAKE PHOTOS.
10. SILICONE ALL WALL PENETRATIONS AND MOUNT ARCH BACK TO WALL USING SUPPLIED LAG BOLTS AND WASHERS. IF EIFS OR TILE IS PRESENT INSERT ALUMINUM PIPES IN THE 1" DIA. HOLES BEFORE MOUNTING ARCH BACK.
11. ATTACH FACE TO BACK ((17) LOCATIONS) USING HARDWARE REMOVED FROM STEP 1.
12. INSURE TOGGLE SWITCH IS LEFT IN 'ON' POSITION
13. PLEASE ENSURE THAT THE BACKER IS FLAT AGAINST THE WALL AND THAT THERE ISN'T ANY FLEXING IN THE BACKER
14. ENSURE BACKER AND FACE ARE TIGHTLY SEALED TOGETHER.
15. ENSURE NO LIGHT LEAKS EXIST AROUND THE PERIMETER OF THE SIGN.

SQUARE FOOT AREA:
ACTUAL: 5 SQ. FT.
BOXED: 14 SQ. FT.

DESIGNED WINDLOAD: 150 MPH WIND SPEED 3-SECOND GUST EXPOSURE.
COMPLIANT WITH NATION BUILDING CODES AND STANDARDS (IBC, UBC)

UNLESS OTHERWISE SPECIFIED:
DIMENSIONS ARE IN INCHES
TOLERANCES:
FRACTIONAL ± 1/8
X.X ± .06
X.XX ± .015
ANGULAR
MACHINED ± .5°
FINISH
DRAWN LO 3/21/12
CHECKED
DESIGNED
CUSTOMER APPV
ENG APPR
NEXT ASSY
USED ON
APPLICATION
DO NOT SCALE DRAWING

Everbrite
Identity Systems Division

PROPRIETARY AND CONFIDENTIAL
THE INFORMATION CONTAINED IN THIS DRAWING IS THE SOLE PROPERTY OF EVERBRITE LLC. ANY REPRODUCTION IN PART OR AS A WHOLE WITHOUT THE WRITTEN PERMISSION OF EVERBRITE LLC IS STRICTLY PROHIBITED

PRODUCT:
MCD NEXTGEN 42" ARCH

TITLE:
INSTALL,MCD NG 42" ARCH

SIZE B | DWG. NO. IN449582S | REV E

SCALE: 1:10 TYPE: PART | SHEET 1 OF 2

8/14/2014 S:\SECURE\ISD\Engineering\Drawings\1 Production Released Drawings\McDonald's\NEXT GEN 2011\42 arch\E011335\IN449582S REV E

MOUNTING TO BRICK OR SPLIT ROCK

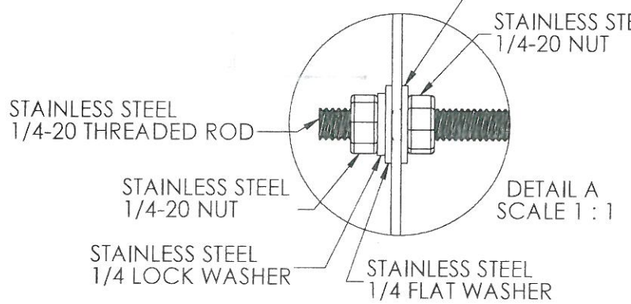

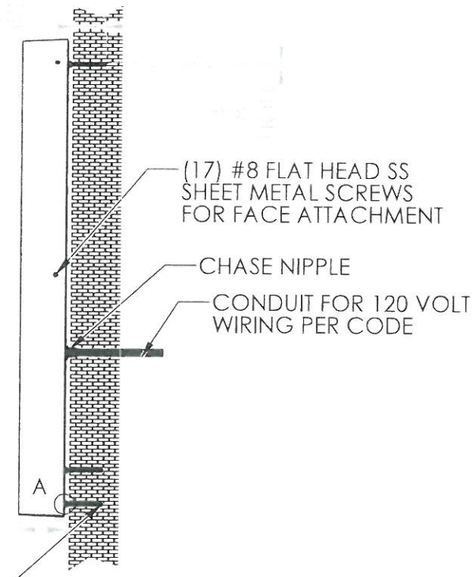

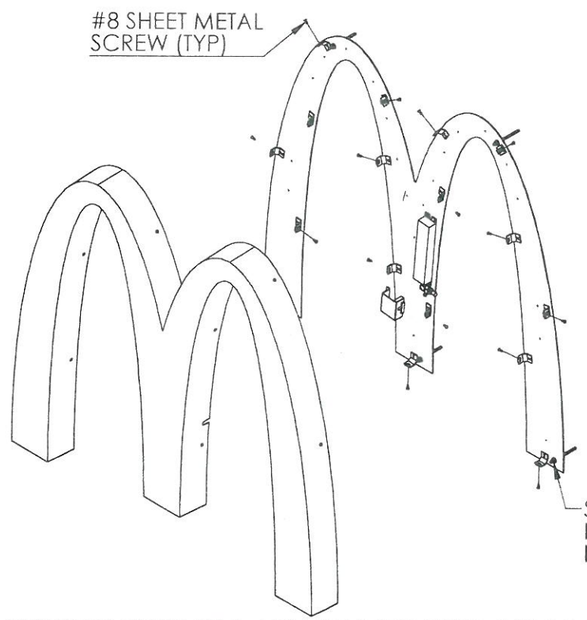

(2) 1/4-20 X 6" THREADED RODS STAINLESS STEEL (USE IF NEEDED)
(5) 1/4-20 X 4" THREADED RODS STAINLESS STEEL
(10) 1/4-20 NUTS STAINLESS STEEL
(5) 1/4" LOCK WASHERS STAINLESS STEEL
(10) 1/4" FLAT WASHERS STAINLESS STEEL
(AS REQUIRED) ADHESIVE
(BY EVERBRITE)

Rev:	DESCRIPTION:	DATE:	APPROVED:
A	INITIAL RELEASE	3/21/12	LO
B	INITIAL RELEASE	05/03/12	RCW
C	INTALL INSTRUCTIONS AND NOTES WERE UPDATED	06/11/12	RCW
D	INSTALL INSTRUCTIONS UPDATED TO INCLUDE MOUNTING TO EIFS AND TILE	07/05/12	RCW
E	INSTALL INSTRUCTIONS AND NOTES WERE UPDATED	03/18/14	GAL

INSTALLATON INSTRUCTIONS:

1. REMOVE FACE BY REMOVING (17) #8 PHILLIPS FLAT HEAD SCREWS AROUND PERIMETER OF FACE. PULL FACE OFF OF BACK.
2. POSITION AS REQUIRED, MARK MOUNTING AND CABLE LOCATIONS.
3. PRE-DRILL (5) 3/8" DIA X 3" DEEP HOLES IN THE WALL FOR THE 1/4-20 THREADED RODS. ENSURE A 1" MIN EMBEDMENT OF THE ROD INTO THE WALL. (PROVIDED 6" LAGS SHOULD BE USED FOR TOP MOUNTING HOLES IF 1" EMBEDMENT IS NOT ACHIEVED.)
4. DRILL CLEARANCE HOLE FOR THE CABLE AND FITTING.
5. ATTACH THE THREADED RODS THROUGH THE METAL BACK AS SHOWN IN DETAIL A.
   ATTACH FACE TO BACK (17) LOCATIONS.
6. MAKE FINAL ELECTRICAL CONNECTIONS. IF ELECTRICAL IS NOT PROVIDED CONTACT EVERBRITE.
7. TEST LIGHT. TAKE PHOTOS. (NOTE: BE SURE TO PUSH WIRE BACK THROUGH THE CONDUIT BEFORE ATTACHING SIGN TO THE WALL.)
8. CLEAR DUST FROM THE 3/8" HOLES IN THE WALL. INSERT ADHESIVE INTO THE 3/8" HOLES IN WALL.
9. SILICONE ALL WALL PENETRATIONS
10. MOUNT SIGN TO WALL BY SLOWLY PUSHING THE THREADED RODS INTO THE HOLES FILLED WITH ADHESIVE.
11. ENSURE TOGGLE SWITCH IS IN ON POSITION.
13. PLEASE ENSURE THAT THE BACKER IS FLAT AGAINST THE WALL AND THAT THERE ISN'T ANY FLEXING IN THE BACKER
14. ENSURE BACKER AND FACE ARE TIGHTLY SEALED TOGETHER.
15. ENSURE NO LIGHT LEAKS EXIST AROUND THE PERIMETER OF THE SIGN.

DESIGN NOTES:

1. THIS SIGN IS INTENDED TO BE INSTALLED IN ACCORDANCE WITH THE REQUIREMENTS OF ARTICLE 600 OF THE NATIONAL ELECTRICAL CODE AND ALL OTHER APPLICABLE LOCAL CODES. THIS INCLUDES THE PROPER GROUNDING OF THE SIGN.
2. LED-ILLUMINATED SIGN: NEC CLASS 2 LED ELECTRICAL SYSTEM.
3. POWER SUPPLY: INPUT: 120-277 VAC, 50-60 Hz, 75W MAX OUTPUT: 24VDC. VOLTAGE REGULATED, APPROXIMATE 24 WATTS; OPERATION ENVIRONMENT: WET. DAMP, DRY, -25DEG C TO +60 DEG C.
4. (1) 15AMP CIRCUIT REQUIRED

SQUARE FOOT AREA:
ACTUAL: 5 SQ. FT.
BOXED: 14 SQ. FT.

DESIGNED WINDLOAD: 150 MPH WIND SPEED 3-SECOND GUST EXPOSURE. COMPLIANT WITHNATION BUILDING CODES AND STANDARDS (IBC, UBC)

UNLESS OTHERWISE SPECIFIED
DIMENSIONS ARE IN INCHES
TOLERANCES:
FRACTIONAL ± 1/8
X = ± .06
XXX = ± .015
ANGULAR
MACHINED ± 5
BEND ± 1
FINISH
XX = ± .03
XXXX = REAM

Everbrite
Identity Systems Division

	NAME	DATE
DRAWN	LO	3/21/12
CHECKED		
DESIGNED		
CUSTOMER SERV.		
ENG APPR.		

PROPRIETARY AND CONFIDENTIAL
THE INFORMATION CONTAINED IN THIS DRAWING IS THE SOLE PROPERTY OF EVERBRITE LLC. ANY REPRODUCTION IN PART OR AS A WHOLE WITHOUT THE WRITTEN PERMISSION OF EVERBRITE LLC IS STRICTLY PROHIBITED.

NEXT ASSY
USED ON
APPLICATION
DO NOT SCALE DRAWING

PRODUCT:
MCD NEXTGEN 42" ARCH

TITLE:
INSTALL,MCD NG 42" ARCH

SIZE	DWG. NO.	REV
B	IN449582S	E

SCALE: 1:10 TYPE: PART SHEET 2 OF 2

8/14/2014 S:\SECURE\SD\Engineering\Drawings\1 Production Released Drawings\McDonald's\NEXT GEN 2011\42 arch\E011335\IN449582S REV E

42" NextGen Illuminated Building Arch - LED

Everbrite

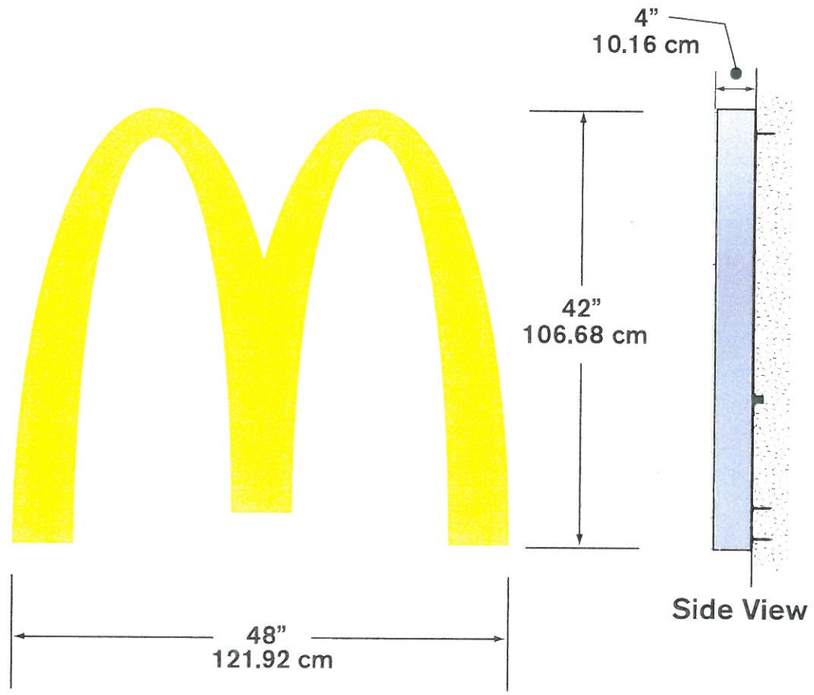

Illumination: LED

Electrical: .35 AMPS

Ballast: (1) OSRAM OT75-120-277-24

Ship Weight:

Rev:	DESCRIPTION:	DATE:	APPROVED:
A	INITIAL RELEASE	4/24/07	
B	ADDED HEIGHT AND WIDTH DIMS	10FEB11	LMR
C	ADDED INSTRUCTIONS FOR TRELLIS MOUNT	14FEB11	LMR

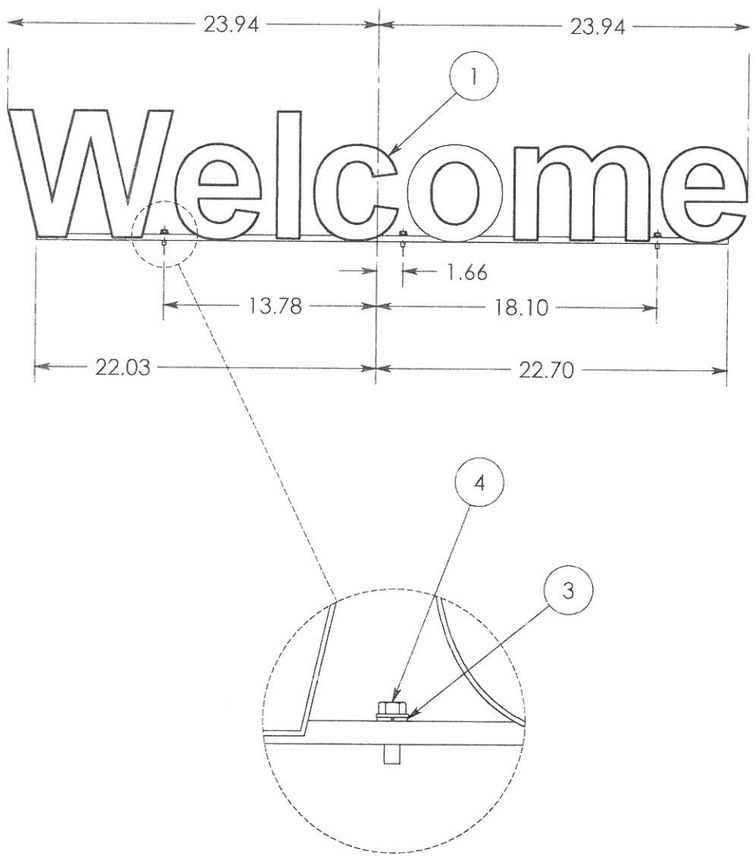

DETAIL A
SCALE 1 : 2

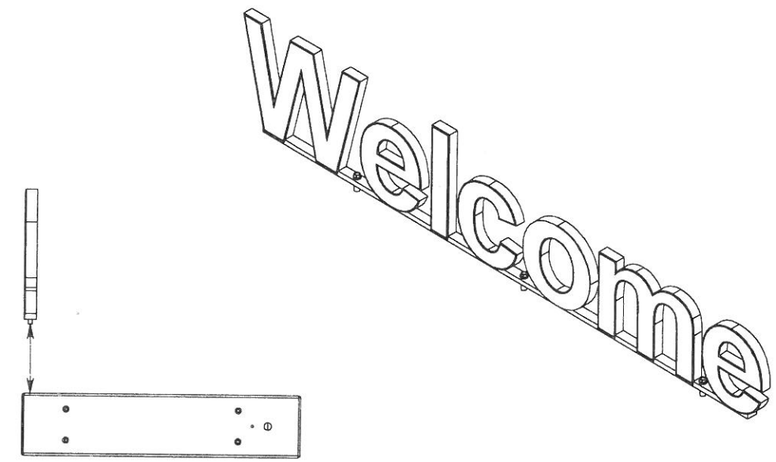

1. INSTALL AWNING AND LIGHT BAR OR TRELLIS
2. SET LETTERS ON TOP OF LIGHT BAR OR TRELLIS
3. LINE UP THE (3) HOLES IN LETTER SET WITH THE (3) RIVNUTS IN THE LIGHT BAR OR CENTER OVER DOOR ON TRELLIS AND MATCH DRILL (#7) AND TAP (3)1/4-20 HOLES
4. SECURELY FASTEN WITH HARDWARE PROVIDED:
   (3) SC050300 ~ 1/4-20 X 1" IN HXHD MS BLACK
   (3) WA000503 ~ 1/4" LOCK WASHER

NOTES:

UNLESS OTHERWISE SPECIFIED
DIMENSIONS ARE IN INCHES
TOLERANCES:
FRACTIONAL ± 1/8
.X = ± .06
.XX = ± .015
.XXX = ± .03
.XXXX = BEAM
ANGULAR:
MACHINED ± .5°
BEND ± 1°
FINISH

	NAME	DATE
DRAWN	TRS	4/24/07
CHECKED		
DESIGNED	TRS	4/24/07
QUALITY		
ENG APPR		

Everbrite
Identity Systems Division

PROPRIETARY AND CONFIDENTIAL
THE INFORMATION CONTAINED IN THIS DRAWING IS THE SOLE PROPERTY OF EVERBRITE LLC. ANY REPRODUCTION IN PART OR AS A WHOLE WITHOUT THE WRITTEN PERMISSION OF EVERBRITE LLC IS STRICTLY PROHIBITED

PRODUCT: McDONALD'S WELCOME LETTERS

TITLE: NON-ILLUM WELCOME LETTERS ON LIGHT BAR OR TRELLIS

SIZE B DWG. NO. IN449168S REV C

SCALE: 1:16 TYPE: INSTALL SHEET 1 OF 1

NEXT ASSY
USED ON
APPLICATION
DO NOT SCALE DRAWING

2/14/2011 S:\secure\ISD\Engineering\Drawings\1 Production Released Drawings\Signature Elements\Awnings\IN449168S-rev C

Welcome Sign

Everbrite
Identity Systems Division

Illumination:	N/A
Ship Weight:	16 lbs.
Other:	3/4" thickness cutout aluminum letters.

Everbrite, LLC, 315 Marion Ave., South Milwaukee, WI, 53172 P: 888-857-4078 F: 877-430-7363 www.everbrite.com

REV	DESCRIPTION	DATE	APPROVED
A	INITIAL RELEASE	6/14/12	[illegible]
E	SITE REVISIONS	8/14/14	[illegible]

PARTS INCLUDED FOR INSTALLATION
(10) 1/16" DIE CUT GASKETS
(1) [illegible] CENTER SUPPORT/HEADLINE BRACKET
(2) 14-1/4" [illegible] END SUPPORT/MOUNTING BRACKET
(2) 8" [illegible] MOUNTING/HEADLINE BRACKET W/ [illegible]
(2) [illegible] WALL MOUNT BRACKET W/ [illegible]
(2) [illegible] SIDE MOUNT BRACKET W/ [illegible]
(2) [illegible] ADJUSTABLE [illegible] BRACKET
(1) [illegible] WATERPROOF [illegible] SWITCH
(2) 3/8" [illegible] SHELLS (12) 3/8-16 X 2-1/2" HEX BOLTS
(28) 3/8-16 X 1" HEX HEAD BOLTS (35) 3/8" LOCK WASHERS
(35) 3/8" FLAT WASHERS
(24) 1/4-20 X 3/8" HEX HEAD BOLTS, LOCK WASHERS, WASHERS, AND NUTS

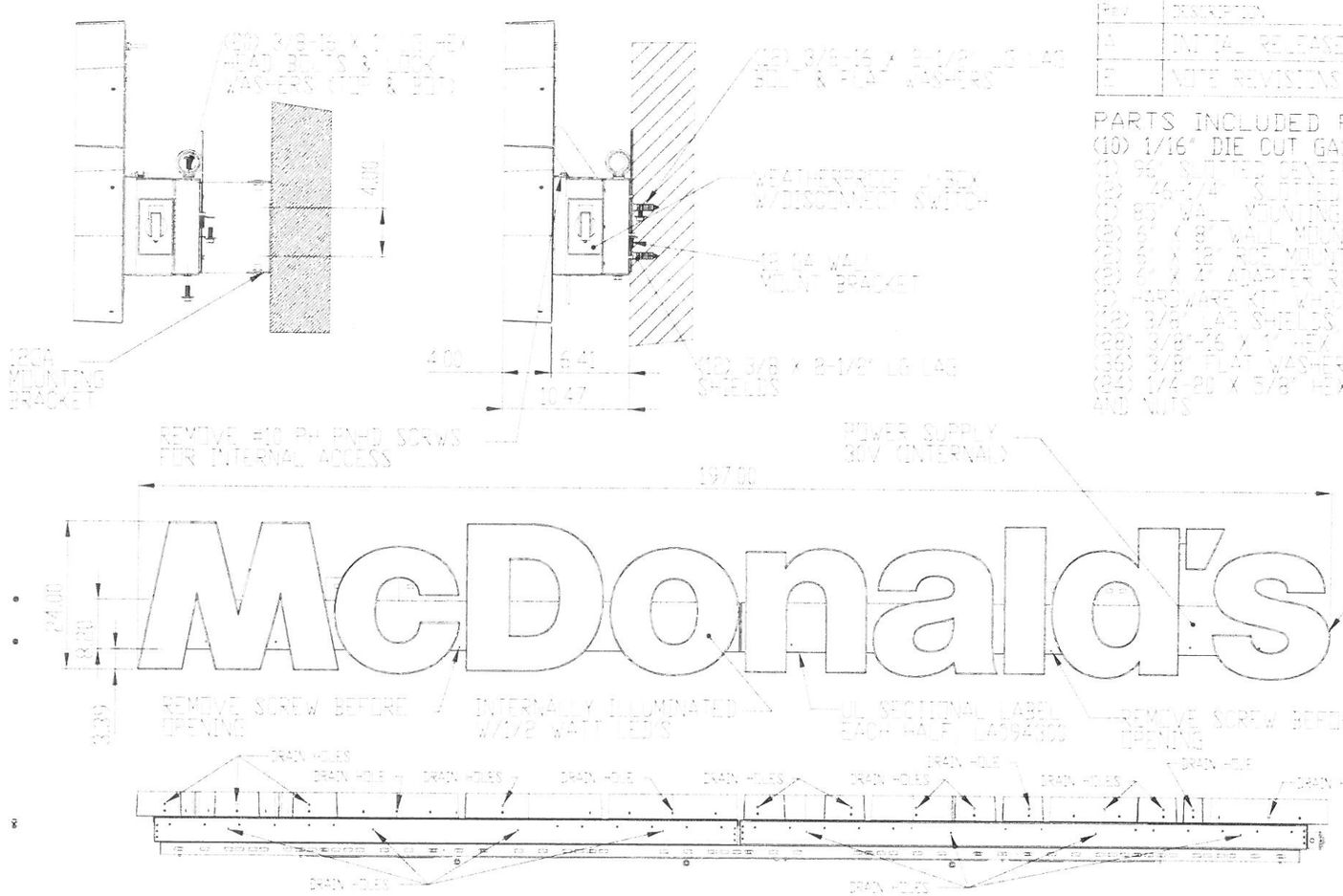

INPUT 120 VAC, 60Hz, 13 AMPS MAX

OUTPUT 30VDC VOLTAGE REGULATED 96 WATT APPROX 75 AMP
OPERATING ENVIRONMENT: WET, DAMP, DRY -25 DEG C TO +70 DEG C

CIRCUIT (2) 15 AMP REQUIRED

AREA 226 S FT (ACTUAL), 228 SQ FT (SQUARE)

RENDERED WITH UP TO 125 MPH WIND STEEL 3-SECOND GUST-EXPOSURE C COMPLIANT WITH-
EXTERNAL BUILDING CODES AND STANDARDS (CBC, IBC)

WARNING: SIGNS MUST BE INSTALLED IN ACCORDANCE WITH THE REQUIREMENTS OF ARTICLE 600 OF THE NATIONAL ELECTRICAL CODE. THE ELECTRICAL CONTRACTOR MUST ENSURE THAT THE SIGN IS GROUNDED IN ACCORDANCE WITH THE UPPER GROUNDING OF THE SIGN.

Everbrite
Identity Systems Division

REV	DATE	PRODUCT VERIFICATION & COMMENTS
DRAWN	[illegible]	
CHECKED		
APPROVED		TITLE ASSY/MOUNTING/DIMENSIONS
DWG NO		REV
3	DA49X100	E
SCALE 1:50		SHEET 1 OF 1

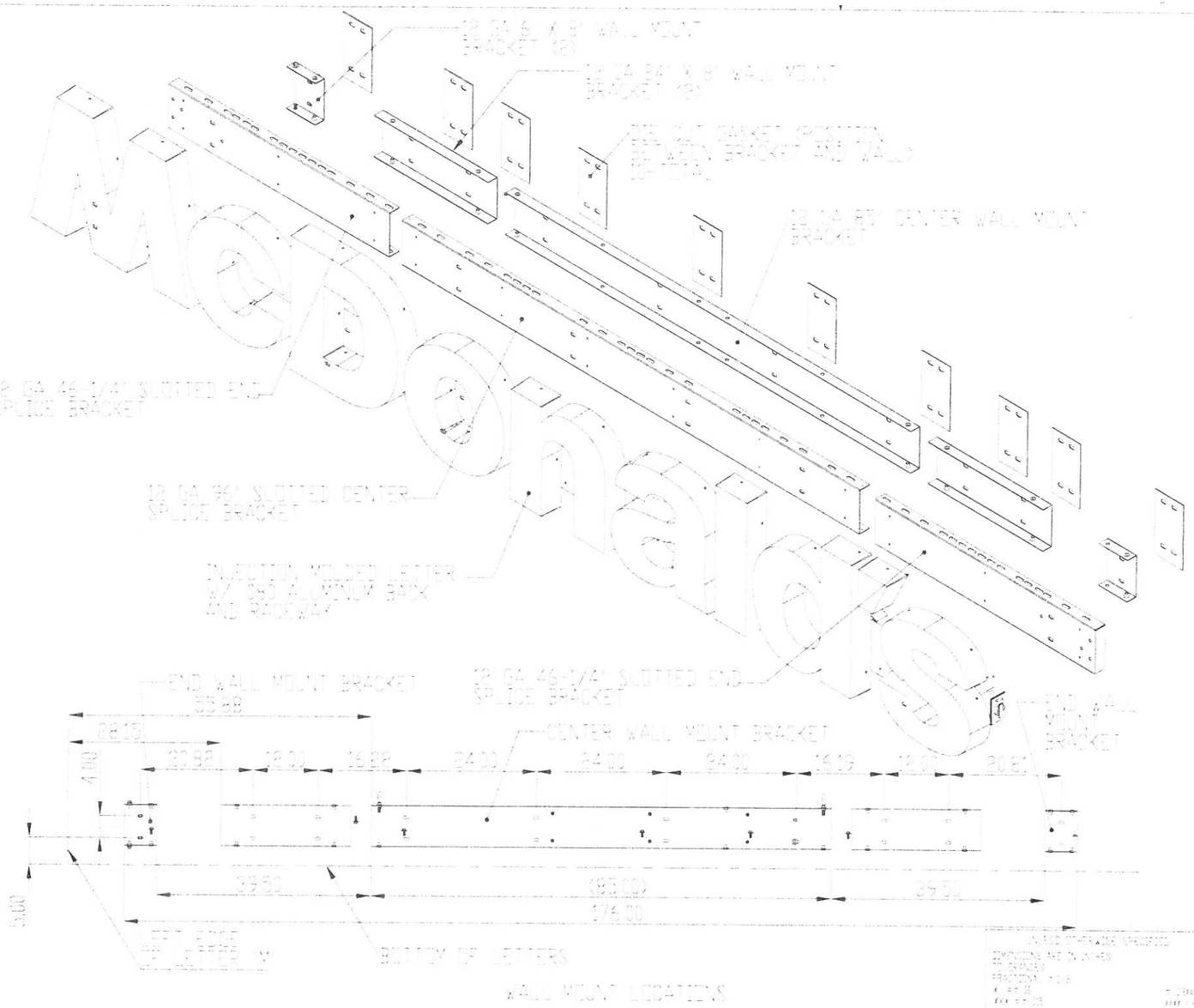

WIRING DISTRIBUTION

1. CREATE AND MARK THE WALL MOUNTING HOLES ACCORDING TO THE ILLUSTRATION BELOW.
2. DRILL 3/8" (OR 1/2") PILOT HOLES, (SIZE DEPENDS ON WALL MATERIAL) AT EACH MARK. INSERT 3/8" (OR 1/2") WALL ANCHORS, AS OFTEN AS NECESSARY. IN THE ALUMINUM BACK SIGN, CAUTIOUSLY DRILL THE HOLES AND PLACE THE GASKET IS PLACED BEHIND.
3. PLACE THE BACK SIGN ON THE WALL MOUNTING BRACKETS AT THE WALL MOUNT. ENSURE THE GASKET IS PROPERLY SEALED AGAINST THE WALL. ENSURE THE SIGN IS SAFELY MOUNTED AT THE WALL. ADJUST LEVEL AND TIGHTEN THE BRACKET.
4. PLACE THE SIGN FACE ONTO THE FRAMEWORK. ENSURE THE FACE IS PROPERLY SEALED AND THE BACKPLATE COVER AND THE FACE AND BACKPLATE ARE SEALED. ENSURE THE SIGN FACE IS PROPERLY SEALED. THE SIGNAGE IS THE LIGHTS ARE PROPERLY SEALED.
5. SECURE THE SLOTTED CENTER AND END SPLICE BRACKETS TO THE BACK OF THE SIGN AT INSIDE THE BACK BOX SIDE BOLTS, LOCK & FLAT WASHERS AND NUTS PROVIDED.
6. CONNECT ALL LEADS, BEGINNING FROM EACH SIGN SECTION, THE BACK TO THE BACK OF THE SIGN. ENSURE THE LEADS ARE PROPERLY SECURED.
7. SECURE BOTH THE MOUNTING BRACKETS AND PENTON LIGHTS AS REQUIRED.
8. SECURE SLOTTED BRACKETS IN BACK OF SIGN AT BRACKETS WITH 1/4" X 1/4" BOLTS (SUPPLIED) (25) LOCK WASHERS AND NUTS.
9. ENSURE THE SIGN IS PROPERLY GROUNDED AT THE RIGHT END LOCATED AT THE SWITCH MOUNTING BOX.
10. TEST LIGHTS ON SIGN. LEAVE SWITCH ON.
11. ENSURE BACKER AND FACE IS TIGHTLY SEALED TOGETHER
12. ENSURE NO LIGHT LEAKS EXIST AROUND THE PERIMETER OF THE SIGN.

	NAME	DATE
DRAWN		6/24/05
CHECKED		
ENGINEERING		
MFG APPROVAL		
COMMENTS:		

PRODUCT NUMBER: 4-FRONT

TITLE: ASSY MOUNTING 4-FRONT

Everbrite
Identity Systems Division

SIZE: D
DWG NO: D44-6005
REV: E
SCALE: NONE
SHEET 2 OF 2

NextGen 24" Wordmark

Everbrite

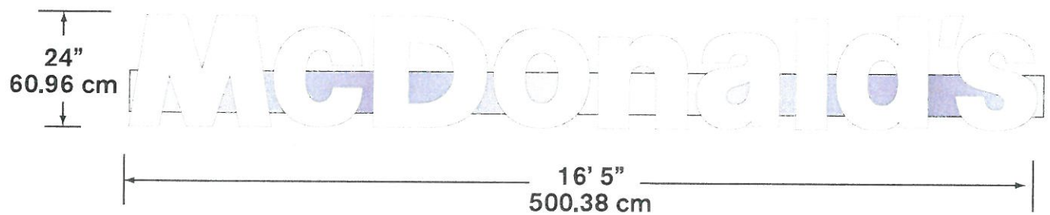
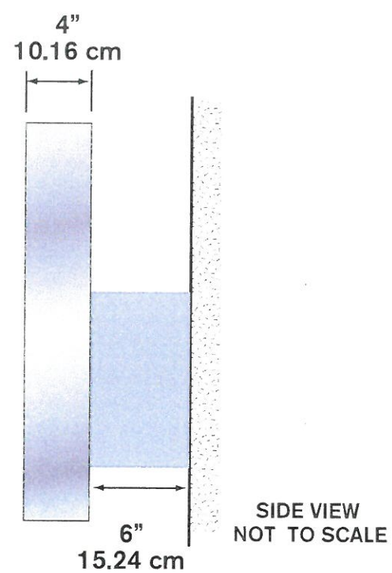
Illumination:	LED
Electrical:	1.6 AMPS
Power Supply:	(1) Amperor ANP90-30P1
Ship Weight: