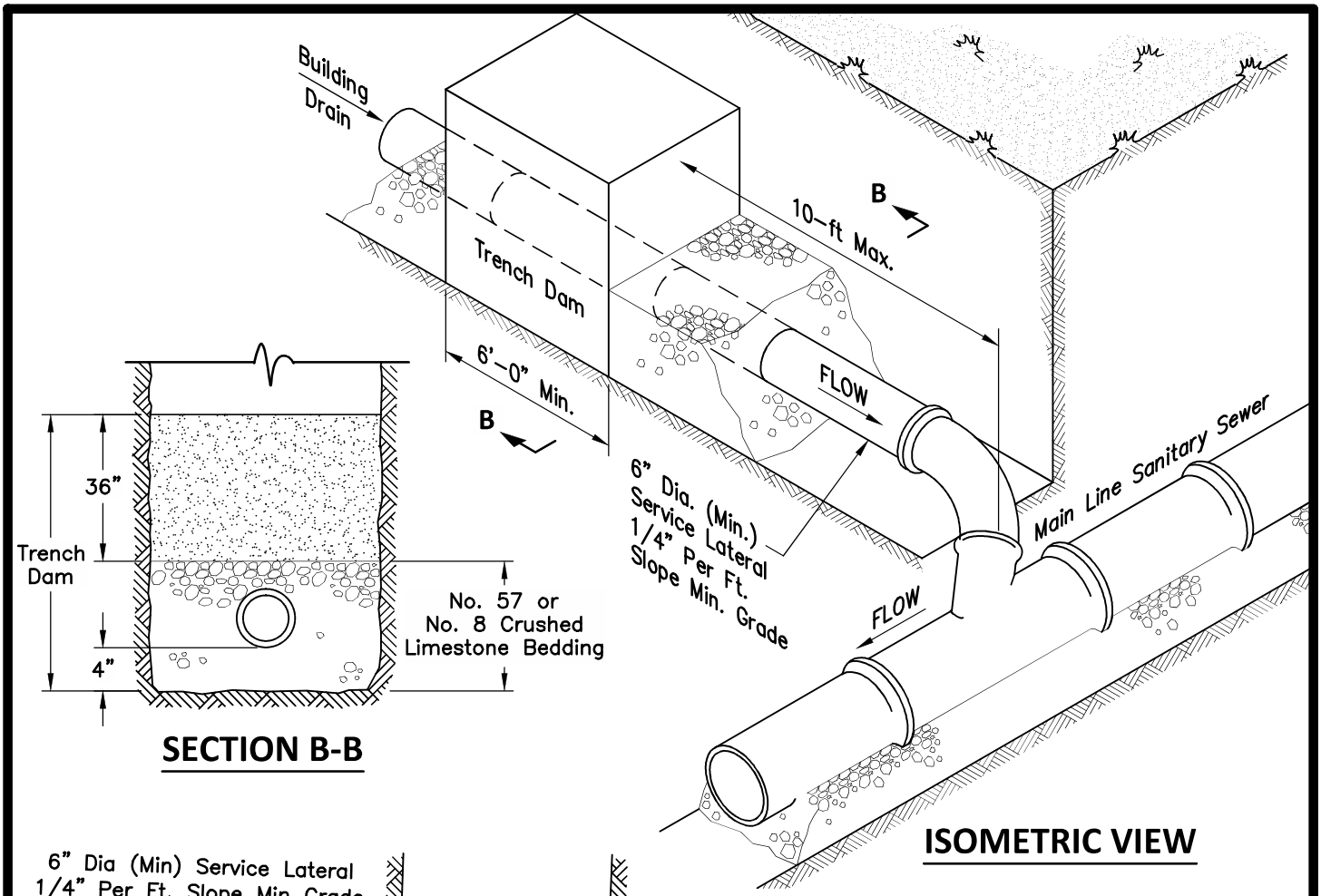

SECTION B-B

ISOMETRIC VIEW

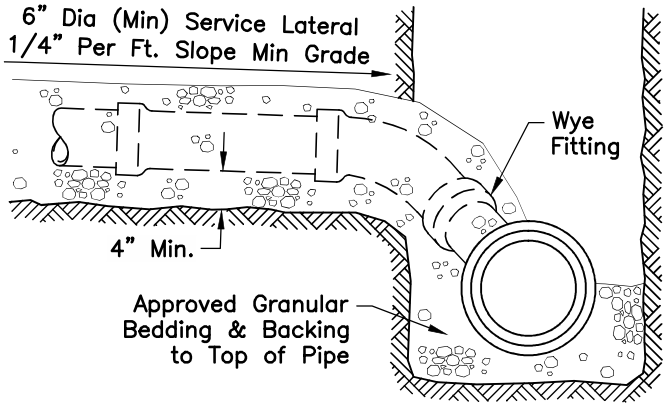

SECTION A-A

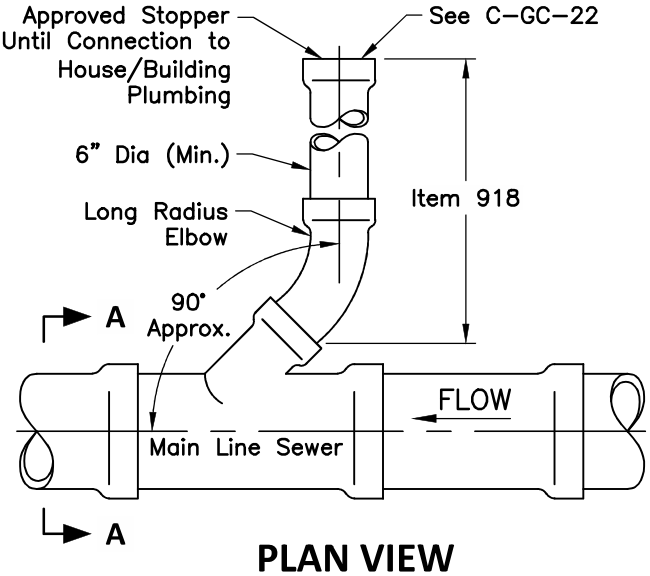

PLAN VIEW

DETAIL NOTES

1. Trench dams are required as specified under Columbus CMS 918.04 and shall be constructed to 36-in over the pipe.

2. Sanitary house connection services shall be connected to the existing sewer with the same material fitting or with a compatible adaptor in accordance with Columbus CMS 915 and 918.02.

Approved By:

City Engineer, EMH&T Inc

City Service Director

STANDARD DIMENSIONS FOR

TYPICAL SANITARY SERVICE CONNECTION, AND RISER

CITY OF GROVE CITY, OHIO

STANDARD CONSTRUCTION DRAWING

Revised	Sheet	Drawing No.
October 2015	1/2	C-GC-37

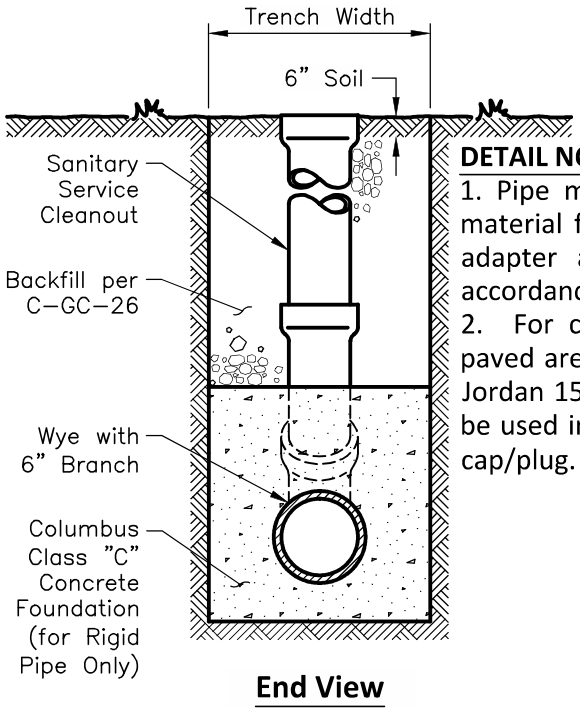

End View

DETAIL NOTES

1. Pipe materials shall be the same material fitting or with a compatible adapter as the main sewer or in accordance with 914.02.
2. For cleanouts that terminate in paved areas, a frame and cover (East Jordan 1578 or approved equal) shall be used in addition to manufacturers cap/plug.

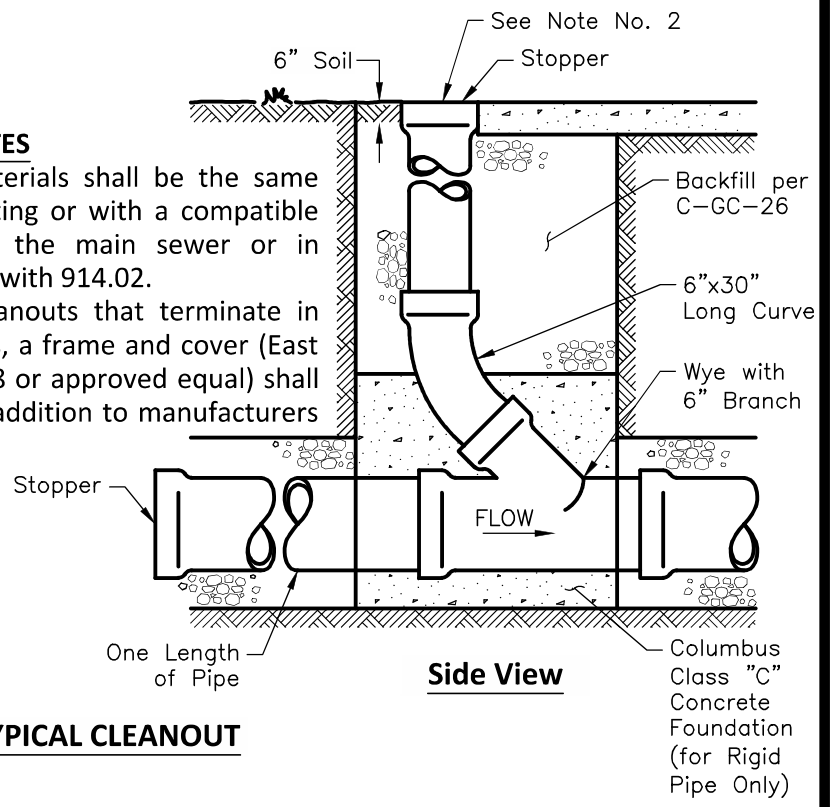

Side View

TYPICAL CLEANOUT

DETAIL NOTES

1. When a wye branch is not available in the main line sewer, the main line may be tapped as shown in standard drawing G-GC-30 or as approved by the City Engineer.

2. No tap shall be made into any sanitary sewer until all permits have been obtained, all legal fees paid, and the service department notified three days prior to beginning work.

3. The Contractor shall place a bedding cut off trench dam of native clay or impervious soil across and along the trench at a point 10 feet upstream from the main line sewer wye, tee or saddle to retard and resist the movement of groundwater through the trench granular bedding or backfill material. The trench dams shall be carefully compacted and shall be 6 feet in thickness, as measured along the service centerline and shall be constructed against the undisturbed trench sides from the bottom of the trench to a limit of 36 inches over the top of the pipe.

4. For bedding material see standard drawings C-GC-26 and C-GC-27.

Approved By: City Engineer, EMH&T Inc City Service Director	STANDARD DIMENSIONS FOR **TYPICAL SANITARY SERVICE CONNECTION, AND RISER**	**CITY OF GROVE CITY, OHIO** STANDARD CONSTRUCTION DRAWING Revised: October 2015 · Sheet: 2/2 · Drawing No.: C-GC-37