PIPE ENDWALL WITHOUT STONE VENEER

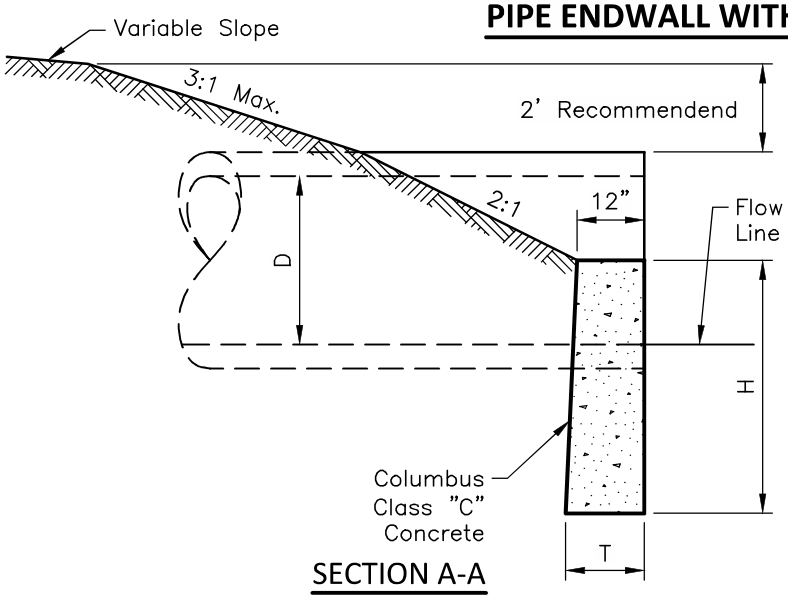

SECTION A-A

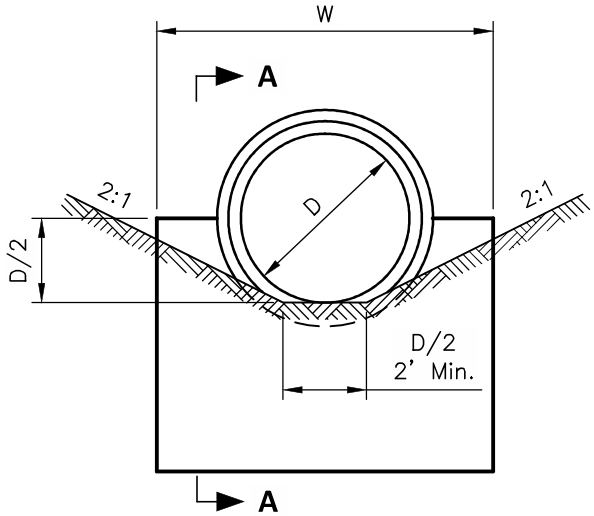

ELEVATION

PIPE ENDWALL WITH STONE VENEER

D = Diameter of Pipe
W = Width of Endwall
H = Height of Endwall
T = Thickness at Bottom ot Endwall

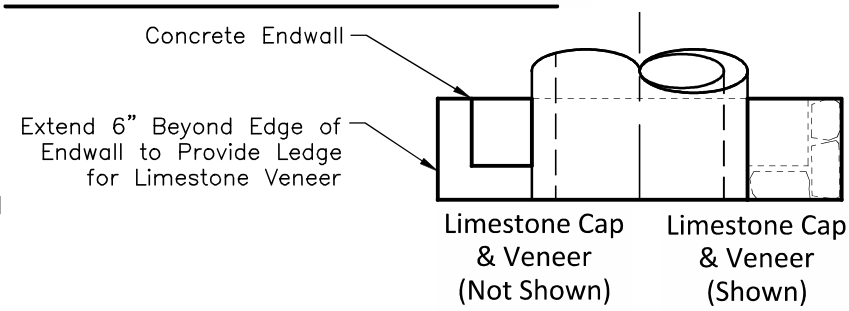

PLAN VIEW
(Symmetrical)

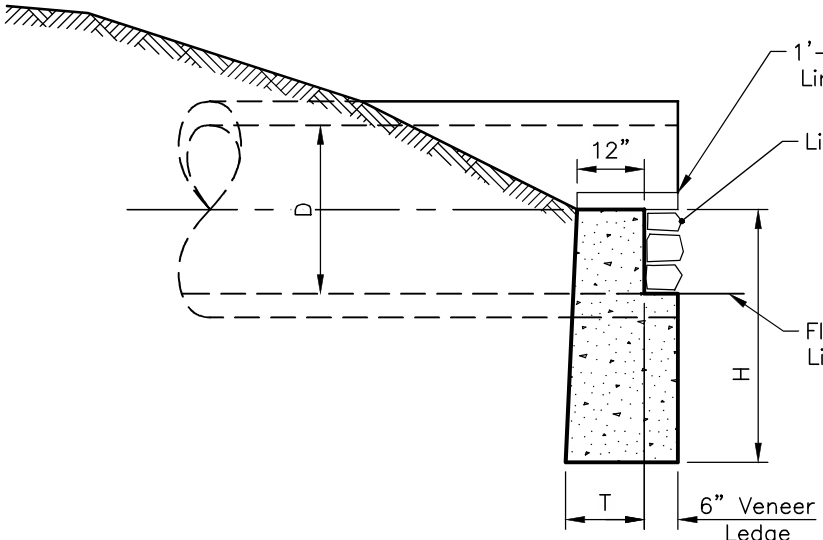

SECTION A-A

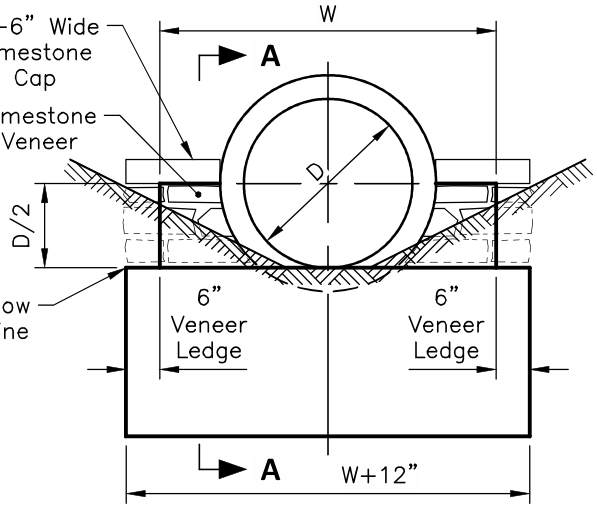

ELEVATION

Approved By:

City Engineer, EMH&T Inc

City Service Director

STANDARD DIMENSIONS FOR

PIPE ENDWALL

CITY OF GROVE CITY, OHIO

STANDARD CONSTRUCTION DRAWING

Revised	Sheet	Drawing No.
	1/2	C-GC-23

DETAIL NOTES:

1. Stone Facing shall be on all exposed surfaces of the outlet structures, unless an exception is granted by the City.
2. Stone is to be North Shore Bluff Limestone. Alternate selections must be approved by the City Service Director.
3. 1/2" Max dry laid look joints hold mortar back 3" Min.
4. Vary thickness of adjacent horizontal stone courses. Whenever possible lay large chunks and fill in around with thinner stones.
5. Pipe end shall be flush with the 6" veneer ledge.
6. Concrete quantities presented in the table are for the endwall only.
7. All pipes terminating at an endwall must be concrete pipe from the endwall to the next upstream structure.
8. See Sheet 1/2 for additional information.

D = Diameter of Pipe
W = Width of Endwall
H = Height of Endwall
T = Thickness at Bottom ot Endwall

ENDWALL FOR CONCRETE PIPE					
D	W	H	T	Concrete Cu. Yds. without Stone Veneer	Concrete Cu. Yds. with Stone Veneer
12"	2'–0"	3'–0"	12"	0.20	0.38
15"	2'–6"	3'–2"	12"	0.25	0.46
18"	3'–0"	3'–3"	12"	0.31	0.44
21"	3'–6"	3'–4"	12"	0.37	0.62
24"	4–0"	3'–6"	12"	0.43	0.70
27"	4'–6"	3'–8"	12"	0.49	0.72
30"	5'–0"	3'–9"	12"	0.56	0.78
33"	5'–6"	3'–10"	12"	0.62	0.96
36"	6'–0"	4'–0"	12"	0.69	1.06
39"	6'–6"	4'–2"	12"	0.77	1.17
42"	7'–0"	4'–3"	12"	0.84	1.26
48"	8'–0"	4'–6"	14"	1.09	1.56
54"	9'–3"	4'–9"	14"	1.32	1.90
60"	10'–6"	5'–6"	16"	1.93	2.53

Approved By:

City Engineer, EMH&T Inc

City Service Director

STANDARD DIMENSIONS FOR

PIPE ENDWALL

CITY OF GROVE CITY, OHIO

STANDARD CONSTRUCTION DRAWING

Revised	Sheet	Drawing No.
October 2015	2/2	C-GC-23