GRATE
(Approx. Wt. 104 lbs.)

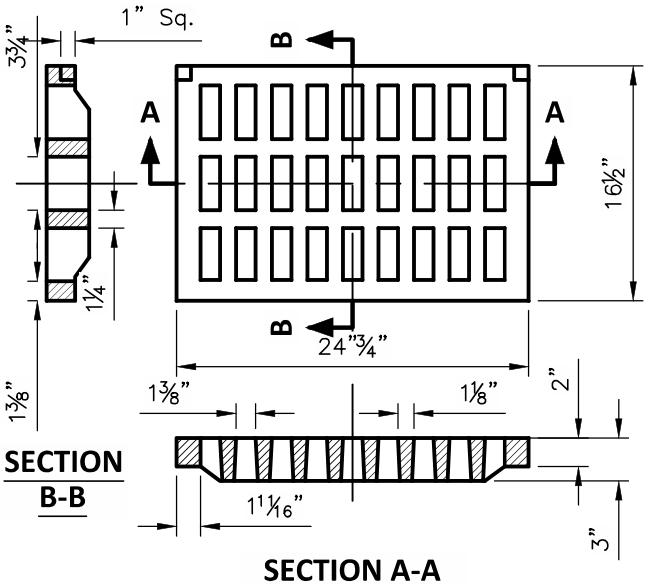

SECTION B-B

SECTION A-A

CURB BOX
(Approx. Wt. 54 lbs.)

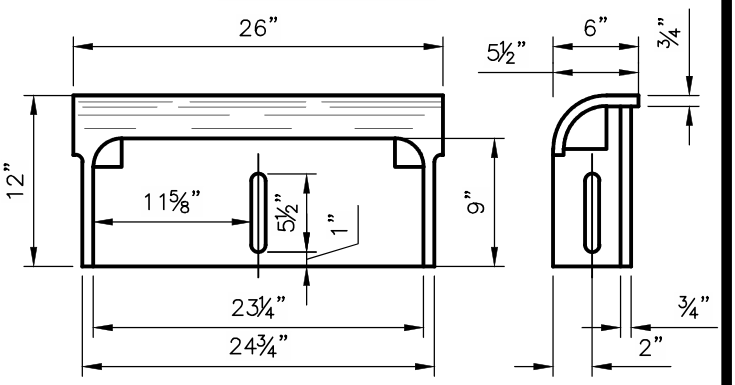

ELEVATION

END VIEW

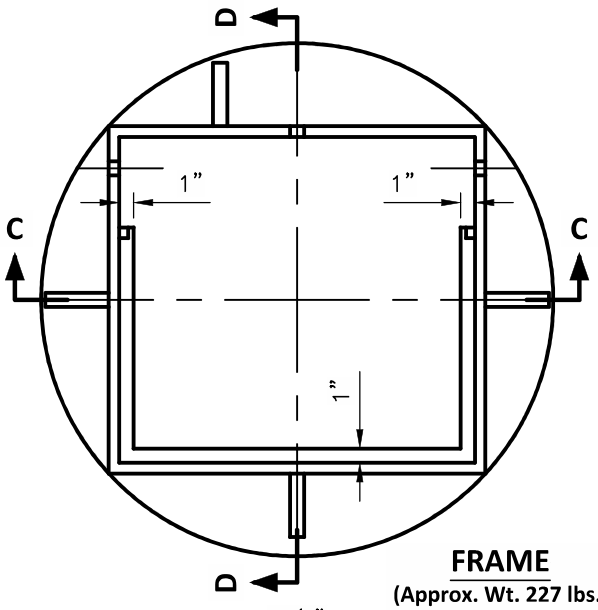

FRAME
(Approx. Wt. 227 lbs.)

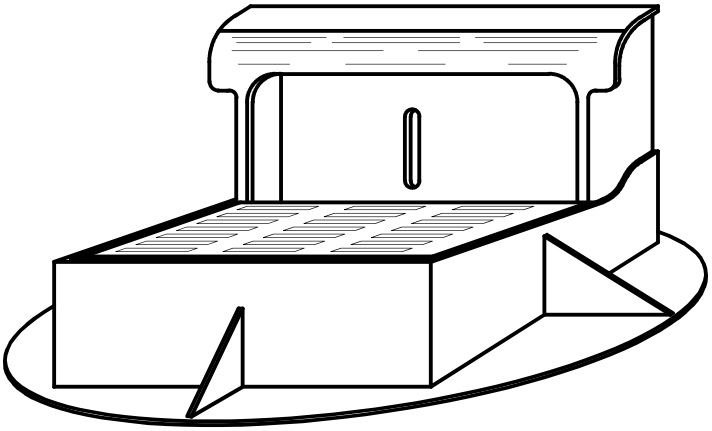

PERSPECTIVE VIEW

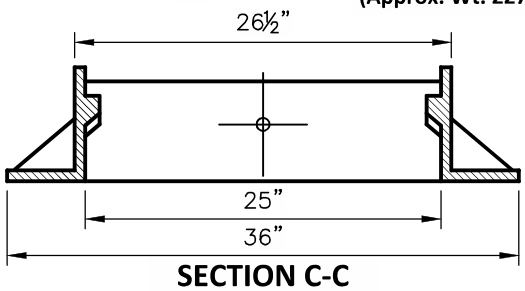

SECTION C-C

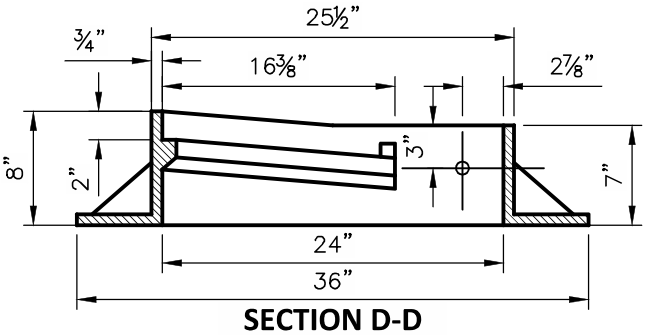

SECTION D-D

Approved By:

City Engineer, EMH&T Inc

City Service Director

STANDARD DIMENSIONS
FOR

CAST IRON FRAME FOR
RADIUS GUTTER INLET

CITY OF
GROVE CITY, OHIO

STANDARD
CONSTRUCTION DRAWING

Revised		Drawing No.
October 2015		C-GC-16