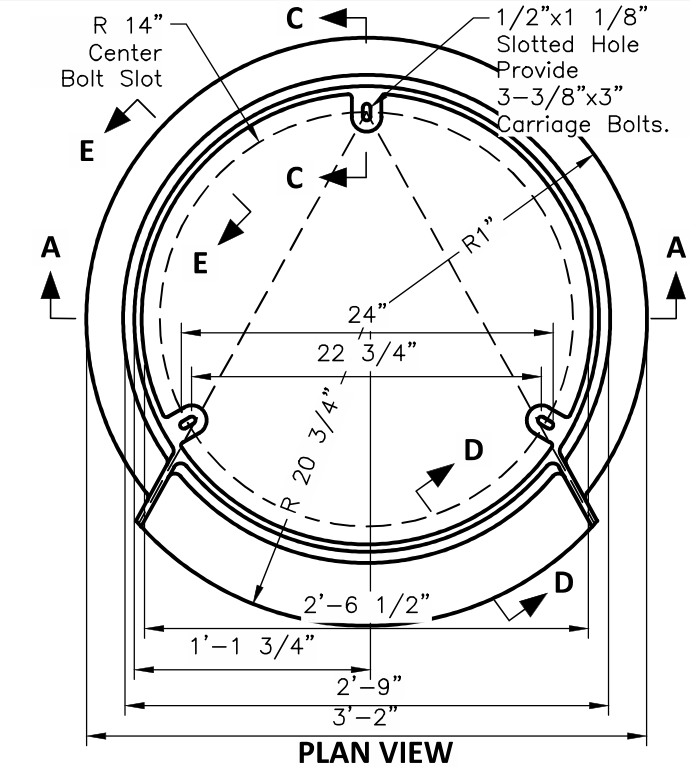

PLAN VIEW

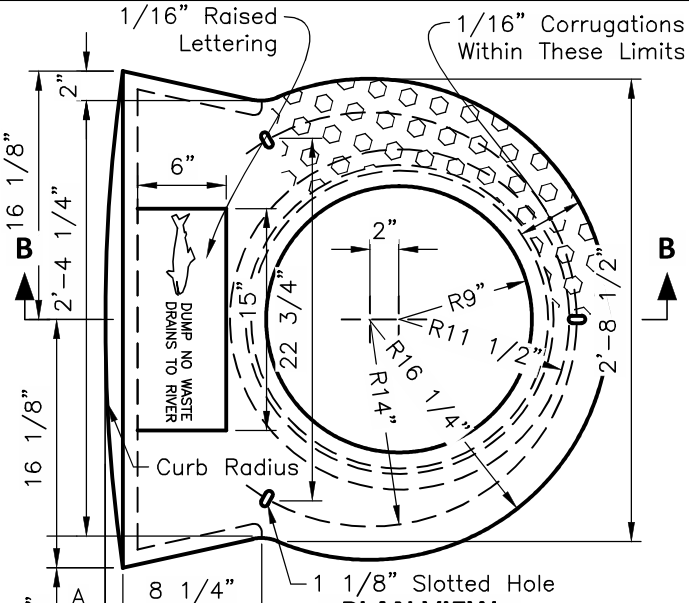

PLAN VIEW

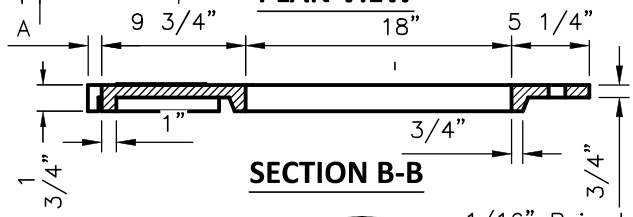

SECTION B-B

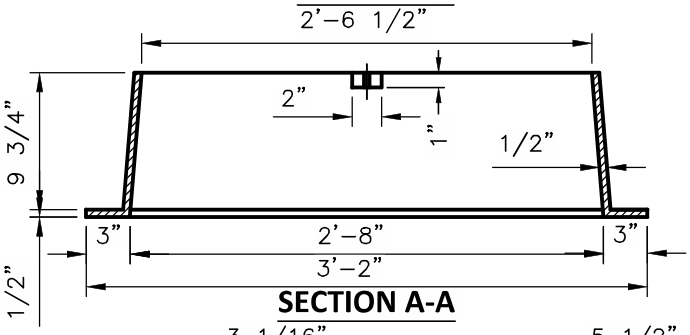

SECTION A-A

DIMENSION "A" TABLE

CURB	"A"
STRAIGHT	0.00"
20' RAD.	0.54"
15' RAD.	0.72"
12' RAD.	0.91"
8' RAD.	1.36"
6' RAD.	1.83"

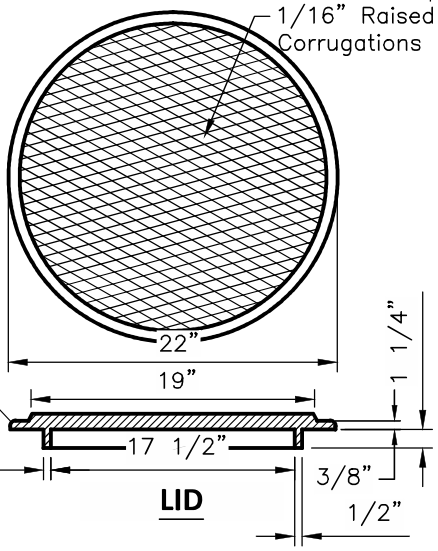

LID

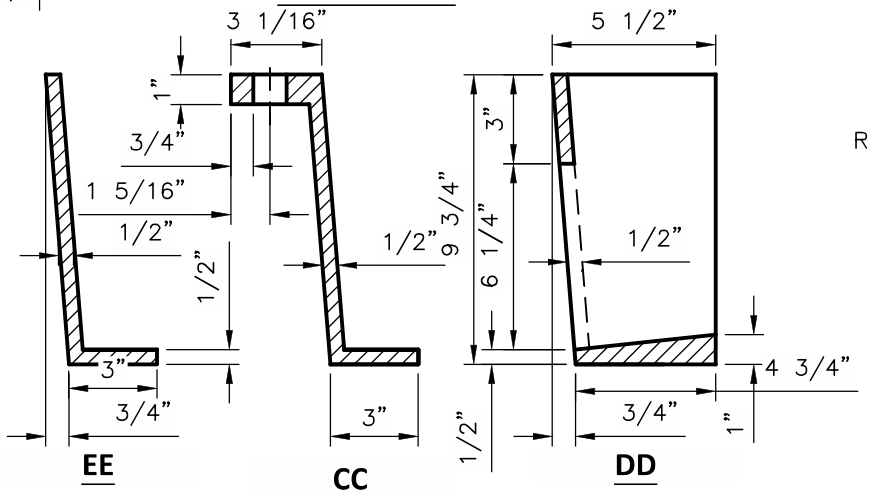

EE CC DD

SECTIONS

Approved By:

City Engineer, EMH&T Inc

City Service Director

STANDARD DIMENSIONS FOR

CASTINGS FOR RADIUS CURB INLET

CITY OF GROVE CITY, OHIO

STANDARD CONSTRUCTION DRAWING

Revised		Drawing No.
October 2015		C-GC-14