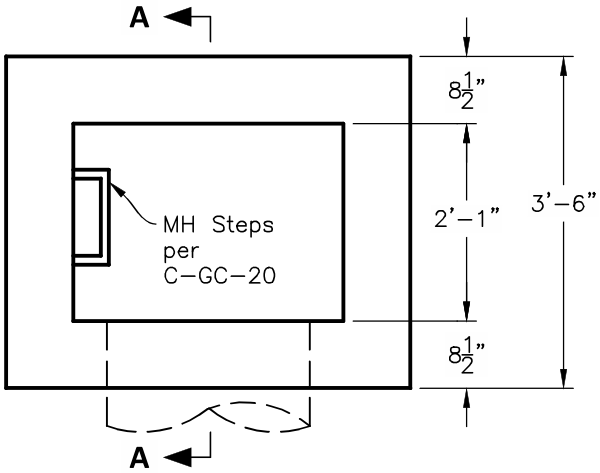

PLAN VIEW
(Cover Removed)

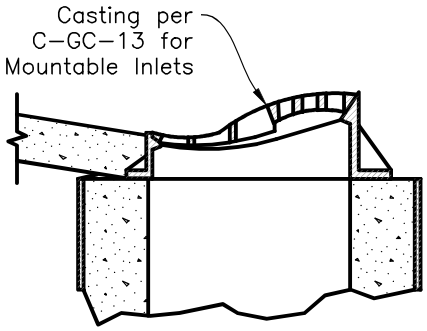

MOUNTABLE INLET
(SEE NOTE #9)

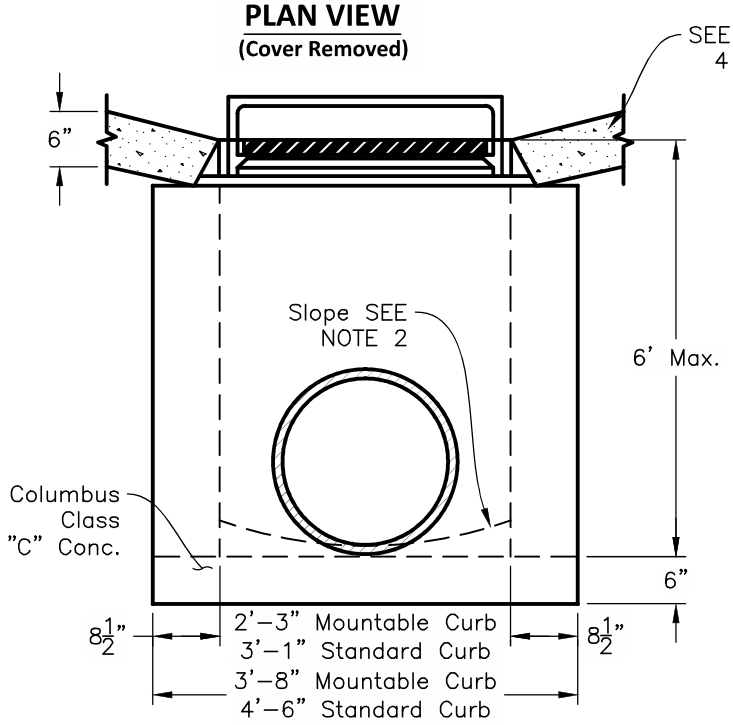

ELEVATION

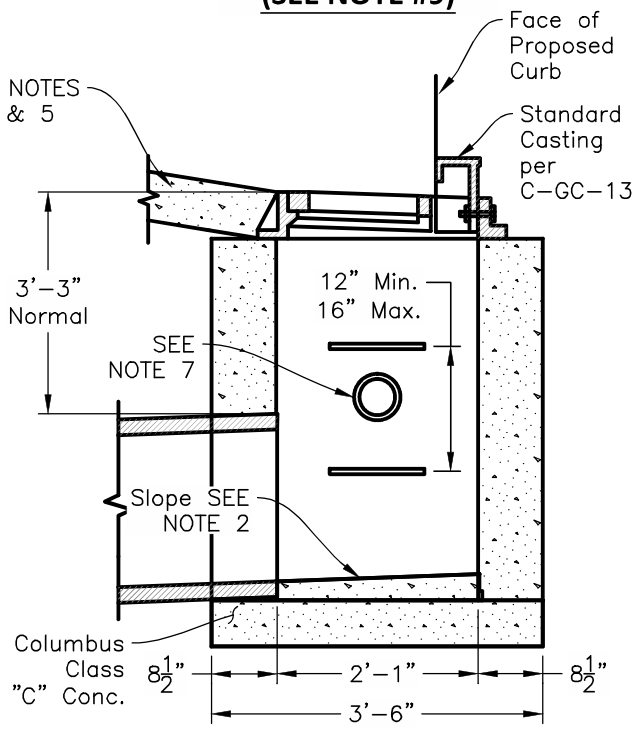

SECTION A-A

DETAIL NOTES

1. Precast walls shall have a Min. 6-in thickness, and be sufficiently reinforced for shipping and handling. All concrete shall be Columbus Class "C" per Columbus CMS Item 499.
2. The inlet bottom shall be shaped to provide a minimum slope of 2-in to outlet pipe. The cross sectional form and longitudinal slope shall be adapted to location of outlet pipe as directed.
3. Outlet pipe may be located in front or back and shall be directed towards center of inlet.
4. The existing gutter within the area around inlet where cut out, shall be replaced with Columbus Class "C" concrete or asphalt concrete paving as ordered.
5. Backfilling within proposed paved areas shall be in accordance with Grove City Type A backfill or as directed by the City.
6. Structures shall be cast in place concrete, Columbus Class "C", or precast concrete.
7. Place 4-in or 6-in curb drain stubs 30-in below top of curb or as directed.
8. Maximum pipe diameters are 18-in into side walls and 24-in into front or backwalls.
9. Unless an exception is granted by the City, mountable curb is not approved for use in Grove City. This detail is provided for repairs or modificiations in areas where mountable curb currently exists.

Approved By:

City Engineer, EMH&T Inc

City Service Director

STANDARD DIMENSIONS
FOR

CURB & GUTTER INLET

CITY OF
GROVE CITY, OHIO

STANDARD
CONSTRUCTION DRAWING

Revised		Drawing No.
October 2015		C-GC-9