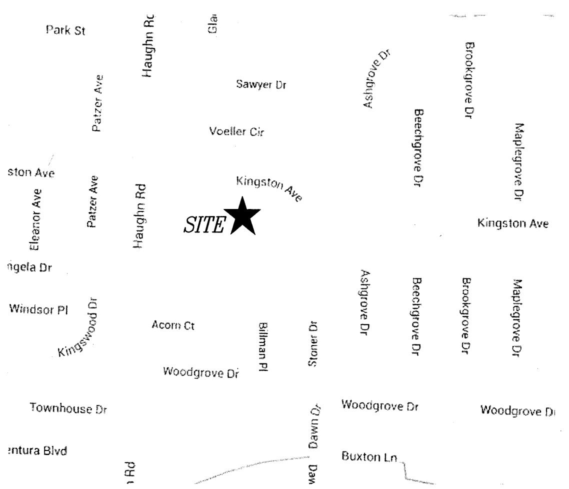

LOCATION MAP

STORM SCHEDULE

(EX) EXISTING CATCH BASIN
N 684146.23
E 1805334.26
GRATE=827.24
INV IN=823.84 (12") W

(1) ODOT CB No. 2-2B
N 684138.96
E 1805291.18
GRATE=828.30
INV IN=824.03 (12") SW
INV OUT=824.03 (12") E

(2) ODOT CB No. 2-4
N 684092.51
E 1805269.25
GRATE=829.50
16"Wx3"H WINDOW=826.37 (S)
2'Wx8"H WINDOW=828.33 (E,W&S)
SUMP=822.29
INV IN=824.29 (6") SW
INV OUT=824.29 (12") NE

(3) GROVE CITY STANDARD ENDWALL
N 683976.37
E 1805237.35
INV=825.44 (30") SW

(4) CONTECH CDS 3035 WATER QUALITY STRUCTURE OR APPROVED EQUAL
N 683950.01
E 1805223.01
RIM=829.46
INV IN=825.48 (30") SW
INV OUT=825.48 (30") NE

(5) ODOT CB No. 2-3
N 683932.45
E 1805213.45
GRATE=829.34
INV IN=825.51 (30") W
INV OUT=825.51 (30") NE

(6) ODOT CB No. 2-3
N 683947.12
E 1805037.01
GRATE=829.35
INV IN=825.75 (30") W
INV OUT=825.75 (30") E

(7) ODOT CB No. 2-3
N 683955.64
E 1804934.60
GRATE=829.40
INV IN=827.15 (15") N
INV IN=825.90 (30") W
INV OUT=825.90 (30") E

(8) ODOT CB No. 2-3
N 683960.28
E 1804835.31
GRATE=830.79
INV IN=826.03 (30") W
INV OUT=826.03 (30") E

(9) ODOT CB No. 2-3
N 683966.58
E 1804700.62
GRATE=830.43
INV IN=827.71 (12") N
INV IN=826.61 (24") W
INV OUT=826.21 (30") E

(10) ODOT CB No. 2-3
N 684024.21
E 1804558.02
GRATE=830.02
INV IN=827.65 (12") SW
INV IN=827.65 (12") NW
INV IN=827.32 (18") N
INV OUT=826.92 (24") E

(11) ODOT CB No. 2-3
N 684176.76
E 1804566.40
GRATE=830.11
INV IN=828.10 (12") NW
INV OUT=827.70 (18") S

(12) ODOT CB No. 2-3
N 684249.02
E 1804483.54
GRATE=830.70
INV OUT=828.65 (12") SE

(13) ODOT CB No. 2-3
N 684108.23
E 1804417.55
GRATE=830.87
INV OUT=828.37 (12") SE

(14) ODOT CB No. 2-3
N 684027.98
E 1804711.02
GRATE=832.86
INV IN=828.08 (12") N
INV OUT=827.98 (12") S

(15) ODOT CB No. 2-3
N 684226.90
E 1804720.30
GRATE=832.33
INV OUT=828.96 (12") S

(16) ODOT CB No. 2-2B
N 684113.98
E 1804938.00
GRATE=832.27
INV IN=829.81 (12") N
INV OUT=827.94 (15") S

(17) ODOT CB No. 2-2B
N 684176.01
E 1804940.90
GRATE=832.39
INV IN=830.22 (12") NW
INV OUT=830.12 (12") S

(18) ODOT CB No. 2-2B
N 684204.52
E 1804897.54
GRATE=832.97
INV IN=830.45 (12") W
INV OUT=830.45 (12") SE

(19) ODOT CB No. 2-2B
N 684208.66
E 1804808.82
GRATE=832.84
INV OUT=830.84 (12") E

(20) ODOT CB No. 6 FC
N 684386.45
E 1804747.69
GRATE=831.11
INV IN=827.95 (12") N
INV OUT=827.95 (12") S

(21) ODOT CB No. 2-3
N 683897.40
E 1804497.08
GRATE=834.55
INV OUT=828.35 (12") NE

SANITARY SCHEDULE

<EX.> EXISTING MANHOLE
N 684380.47
E 1804517.98
RIM=833.62
INV IN=825.75 (8") E
INV OUT 825.63 (8") N

<1> GROVE CITY TYPE A MANHOLE CLASS "B"
N 684357.53
E 1804736.33
RIM=832.29
INV IN=826.84 (8") E
INV OUT=826.74 (8") W

<2> GROVE CITY TYPE A MANHOLE CLASS "B"
N 684347.60
E 1804949.21
RIM=830.74
INV IN=827.90 (8") S
INV OUT=827.80 (8") W

<3> GROVE CITY TYPE A MANHOLE CLASS "B"
N 684189.14
E 1804941.82
RIM=832.56
INV IN=828.78 (6") SW
INV OUT=828.61 (8") N

SITE DATA

TOTAL ACREAGE OF SITE:	12.99 ACRES
DISTANCE TO NEAREST CROSS STREET: (SITE IS ADJACENT TO THE INTERSECTION OF KINGSTON AVENUE AND HAUGHN ROAD)	0 FEET
TOTAL NUMBER OF PARKING SPACES:	129
NUMBER OF NEW STD. SPACES:	120
NUMBER OF NEW H.C. SPACES:	9
BUILDING SQUARE FOOTAGE:	69,984 SF
CLASSROOM SQUARE FOOTAGE:	26,581 SF

SITE PLAN NOTES:

1. SIDEWALK WITHIN RIGHT-OF-WAY THAT IS TO BE REMOVED AND REPLACED DUE TO UTILITY INSTALLATION OR ENTRANCE DRIVE CONSTRUCTION SHALL BE PER C-GC-46A.
2. PIPING WITHIN THE RIGHT-OF-WAY CONNECTING TO PUBLIC STORM SEWER SHALL BE INSTALLED WITH GRANULAR TYPE A BACKFILL PER C-GC-26.
3. PROPOSED DRIVE ENTRANCES WITHIN RIGHT-OF-WAY TO BE CONSTRUCTED PER C-GC-41B.
4. CURB AND GUTTER WITHIN RIGHT-OF-WAY AT PROPOSED DRIVE ENTRANCES ALONG HOOVER RD. TO BE REMOVED AND REPLACED PER C-GC-57B/C-GC-41A. SIDEWALKS CROSSING THE PREPAVED ENTRANCES SHALL BE ADA COMPLAINT PER C-GC-46.
5. ALL ROOFTOP MOUNTED SERVICE/MECHANICAL EQUIPMENT SHALL BE PAINTED TO MATCH THE BRICK COLOR.

ZONING

EXISTING ZONING: SD-1 EDUCATIONAL
PROPOSED ZONING: SD-1 EDUCATIONAL

UTILITY NOTES

1. ALL ENDWALLS SHALL BE PER CITY OF GROVE CITY STANDARD DRAWING C-GC-23.
2. ALL HEADWALLS SHALL HAVE STONE FACING CONSISTING OF NORTH SHORE BUFF LIMESTONE PER CITY OF GROVE CITY REQUIREMENTS.
3. SITE IS NOT WITHIN THE 100-YEAR FLOODPLAIN ACCORDING TO FEMA MAP NO. 39049C0314K.
4. ALL WATERMAIN CROSSINGS SHALL MAINTAIN A VERTICAL SEPARATION OF 18" MINIMUM. SANITARY SEWER SHALL BE LOCATED A MINIMUM OF 18" BELOW WATERMAIN AT ALL CROSSINGS.

LEGEND

PROPOSED SYMBOLS

- PROPOSED STORM PIPE
- PROPOSED SANITARY PIPE
- PROPOSED WATER PIPE
- (CB) PROPOSED CATCH BASIN
- (MH) PROPOSED STORM MANHOLE
- <MH> PROPOSED SANITARY MANHOLE/CLEANOUT
- PROPOSED FIRE HYDRANT
- DS PROPOSED DOWNSPOUT
- CO PROPOSED CLEANOUT
- PROPOSED CONCRETE
- PROPOSED ASPHALT PAVEMENT
- PROPOSED HEAVY DUTY CONCRETE
- PROPOSED PLANING AND OVERLAY
- PROPOSED DRIVE APPROACH PER C-GC-41B.

EXISTING SYMBOLS

- CONCRETE MONUMENT FOUND
- 5/8" IRON PIN FOUND
- 5/8" CAPPED IRON PIN SET
- 1" IRON PIPE FOUND
- NAIL SET
- BENCHMARK
- EX. UTILITY POLE
- EX. GUY WIRE
- UE — EX. UNDERGROUND ELECTRIC
- E — EX. OVERHEAD ELECTRIC
- AC — EX. HVAC UNIT
- TF — EX. TRANSFORMER
- EX. GROUND LIGHT
- E — EX. ELECTRIC BOX
- EX. LIGHT POLE
- UT — EX. UNDERGROUND TELEPHONE
- T — EX. OVERHEAD TELEPHONE
- T — EX. TELEPHONE MANHOLE
- T — EX. TELEPHONE PEDESTAL
- G — EX. GAS MAIN
- GV — EX. GAS VALVE
- UCATV — EX. UNDERGROUND CABLE TV
- W — EX. WATER MAIN
- EX. FIRE HYDRANT
- WV — EX. WATER VALVE
- WM — EX. WATER METER
- ICV — EX. IRRIGATION CONTROL VALVE
- EX. MANHOLE
- CO — EX. CLEAN OUT
- EX. SANITARY SEWER
- EX. STORM SEWER
- EX. CATCH BASIN
- EX. INLET
- YD — EX. YARD DRAIN
- DS — EX. DOWN SPOUT
- TR — EX. TRAFFIC CONTROL CABINET
- TRP — EX. TRAFFIC SIGNAL POLE
- EX. SIGN
- GP — EX. GUARD POST (PIPE BOLLARD)
- FP — EX. FLAG POLE
- X — EX. FENCE
- SB — EX. SOIL BORING
- EX. HARDWOOD TREE

0 20 40 80

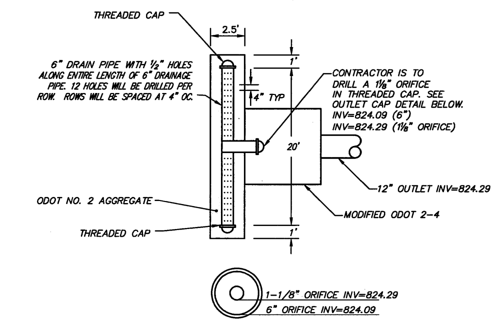

OUTLET CAP DETAIL

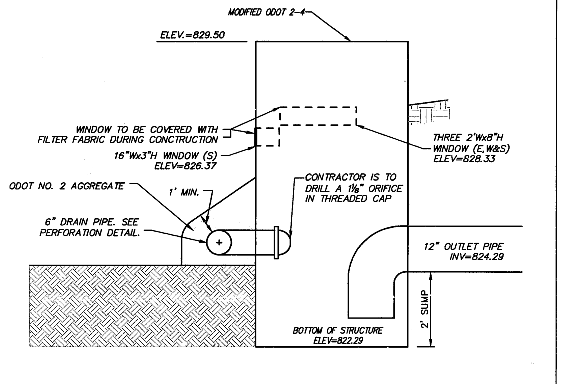

DETENTION / WATER QUALITY OUTFALL STRUCTURE 2
N.T.S.

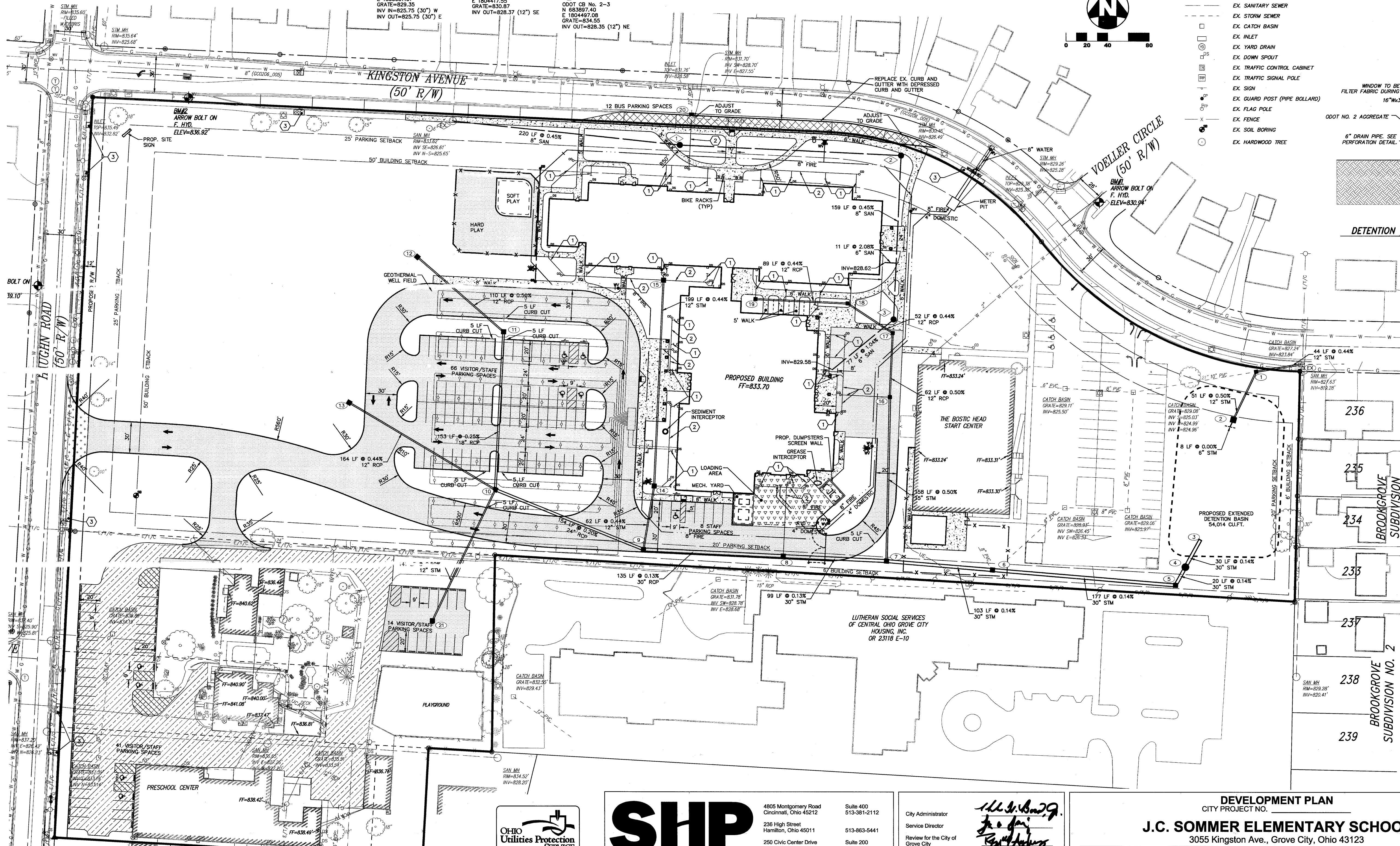

CODED NOTES

1. 8" STM @ 1.00% MIN
2. 12" STM @ 0.50% MIN
3. REMOVE AND REPLACE WALK AT NEAREST JOINT

CONSTRUCTION PHASING

CONSTRUCTION ACTIVITIES WILL BE PHASED TO PERMIT THE OPERATION OF THE EXISTING ELEMENTARY AND HEAD START BUILDINGS. THE EXISTING ELEMENTARY BUILDING SHALL BE OCCUPIED FOR THE DURATION OF PHASE 1; THE HEAD START BUILDING WILL BE OCCUPIED THROUGH THE DURATION OF THE PROJECT.

PHASE 1 SHALL CONSIST OF SELECTIVE SITE DEMOLITION EAST OF THE EXISTING ELEMENTARY BUILDING AND PARTIAL DEMOLITION OF THE EXISTING ELEMENTARY BUILDING TO ALLOW FOR PREPARATION OF THE BUILDING PAD. THE PROPOSED BUILDING AND SUPPORTING INFRASTRUCTURE IN THE SAME AREA SHALL ALSO BE COMPLETED. THE PLAYGROUND ON THE WEST SIDE OF THE HEAD START BUILDING SHALL BE RELOCATED TO THE SOUTH SIDE OF THE BUILDING.

PHASE 2 CONSISTS OF THE DEMOLITION OF THE EXISTING ELEMENTARY BUILDING, PARKING LOTS, AND UTILITIES. PROPOSED PARKING LOTS, WALKS, UTILITIES, AND PERMANENT SEEDING SHALL BE COMPLETED.

STATE OF OHIO
MICHAEL J. COUVREUR
E-70851
REGISTERED PROFESSIONAL ENGINEER
1/10/14

THE KLEINGERS GROUP
CIVIL ENGINEERING
SURVEYING
LANDSCAPE ARCHITECTURE
www.kleingers.com
350 Worthington Rd, Ste B
Westerville, OH 43082
614.882.4311

OHIO Utilities Protection SERVICE
811 or 1-800-362-2764 Call Before You Dig

SHP LEADING DESIGN
4805 Montgomery Road, Cincinnati, Ohio 45212 — Suite 400, 513-381-2112
236 High Street, Hamilton, Ohio 45011 — 513-863-5441
250 Civic Center Drive, Columbus, Ohio 43215 — Suite 200, 614-223-2124
1675 Broadway, Denver, Colorado 80202 — Suite 1300, 303-209-7866

City Administrator
Service Director
Review for the City of Grove City
Jackson Township Fire Department

DEVELOPMENT PLAN
CITY PROJECT NO. ______

J.C. SOMMER ELEMENTARY SCHOOL

3055 Kingston Ave., Grove City, Ohio 43123

SOUTH-WESTERN CITY SCHOOL DISTRICT

3805 Marlane Drive, Grove City, OH 43123

SITE PLAN

DATE 01/10/14

C110

8/24/2012 10:06:03 AM

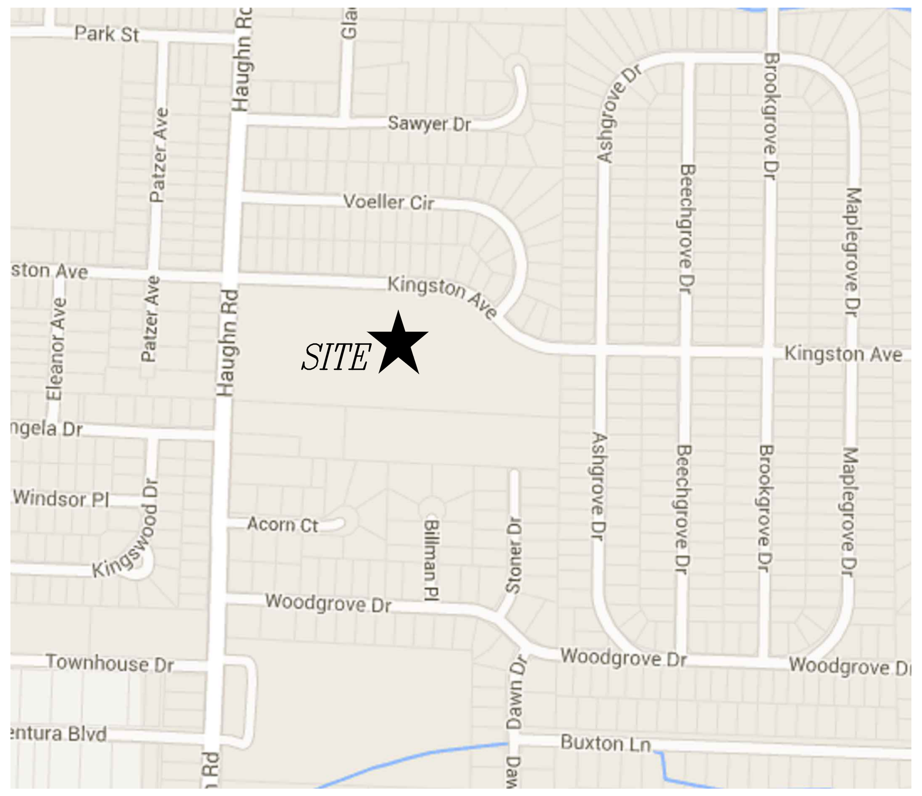

LOCATION MAP

STORM SCHEDULE

EX
EXISITNG CATCH BASIN
N 684146.23
E 1805334.26
GRATE=827.24
INV IN=823.84 (12") W

1
ODOT CB No. 2-2B
N 684138.96
E 1805291.18
GRATE=828.30
INV IN=824.03 (12") SW
INV OUT=824.03 (12") E

2
ODOT CB No. 2-4
N 684092.51
E 1805269.25
GRATE=829.50
16"Wx3"H WINDOW=826.37 (S)
2'Wx8"H WINDOW=828.33 (E,W&S)
SUMP=822.29
INV IN=824.29 (6") SW
INV OUT=824.29 (12") NE

3
GROVE CITY STANDARD ENDWALL
N 683976.37
E 1805237.35
INV=825.44 (30") SW

4
CONTECH CDS 3035
WATER QUALITY STRUCTURE
OR APPROVED EQUAL
N 683950.01
E 1805223.01
RIM=829.46
INV IN=825.48 (30") SW
INV OUT=825.48 (30") NE

5
ODOT CB No. 2-3
N 683932.45
E 1805213.45
GRATE=829.34
INV IN=825.51 (30") W
INV OUT=825.51 (30") NE

6
ODOT CB No. 2-3
N 683947.12
E 1805037.01
GRATE=829.35
INV IN=825.75 (30") W
INV OUT=825.75 (30") E

7
ODOT CB No. 2-3
N 683955.64
E 1804934.60
GRATE=829.40
INV IN=827.15 (15") N
INV IN=825.90 (30") W
INV OUT=825.90 (30") E

8
ODOT CB No. 2-3
N 683960.28
E 1804835.31
GRATE=830.79
INV IN=826.03 (30") W
INV OUT=826.03 (30") E

9
ODOT CB No. 2-3
N 683966.58
E 1804700.62
GRATE=830.43
INV IN=827.71 (12") N
INV IN=826.61 (24") W
INV OUT=826.21 (30") E

10
ODOT CB No. 2-3
N 684024.21
E 1804558.02
GRATE=830.02
INV IN=827.65 (12") SW
INV IN=827.65 (12") NW
INV IN=827.32 (18") N
INV OUT=826.92 (24") E

11
ODOT CB No. 2-3
N 684176.76
E 1804566.40
GRATE=830.11
INV IN=828.10 (12") NW
INV OUT=827.70 (18") S

12
ODOT CB No. 2-3
N 684249.02
E 1804483.54
GRATE=830.70
INV OUT=828.65 (12") SE

13
ODOT CB No. 2-3
N 684108.23
E 1804417.55
GRATE=830.87
INV OUT=828.37 (12") SE

14
ODOT CB No. 2-3
N 684027.98
E 1804711.02
GRATE=832.86
INV IN=828.08 (12") N
INV OUT=827.98 (12") S

15
ODOT CB No. 2-3
N 684226.90
E 1804720.30
GRATE=832.33
INV OUT=828.96 (12") S

16
ODOT CB No. 2-2B
N 684113.98
E 1804938.00
GRATE=832.27
INV IN=829.81 (12") N
INV OUT=827.94 (15") S

17
ODOT CB No. 2-2B
N 684176.01
E 1804940.90
GRATE=832.39
INV IN=830.22 (12") NW
INV OUT=830.12 (12") S

18
ODOT CB No. 2-2B
N 684204.52
E 1804897.54
GRATE=832.97
INV IN=830.45 (12") W
INV OUT=830.45 (12") SE

19
ODOT CB No. 2-2B
N 684208.66
E 1804808.82
GRATE=832.84
INV OUT=830.84 (12") E

20
ODOT CB No. 6 FC
N 684386.45
E 1804747.69
GRATE=831.11
INV IN=827.95 (12") N
INV OUT=827.95 (12") S

21
ODOT CB No. 2-3
N 683897.40
E 1804497.08
GRATE=834.55
INV OUT=828.35 (12") NE

SANITARY SCHEDULE

EX.
EXISTING MANHOLE
N 684380.47
E 1804517.96
RIM=833.62
INV IN=825.75 (8") E
INV OUT=825.65 (8") N

1
GROVE CITY TYPE A MANHOLE CLASS "B"
N 684357.53
E 1804736.33
RIM=832.29
INV IN=826.84 (8") E
INV OUT=826.74 (8") W

2
GROVE CITY TYPE A MANHOLE CLASS "B"
N 684347.60
E 1804949.21
RIM=830.74
INV IN=827.90 (8") S
INV OUT=827.80 (8") W

3
GROVE CITY TYPE A MANHOLE CLASS "B"
N 684189.14
E 1804941.82
RIM=832.56
INV IN=828.78 (6") SW
INV OUT=828.61 (8") N

SITE DATA

TOTAL ACREAGE OF SITE:	12.99 ACRES
DISTANCE TO NEAREST CROSS STREET: (SITE IS ADJACENT TO THE INTERSECTION OF KINGSTON AVENUE AND HAUGHN ROAD)	0 FEET
TOTAL NUMBER OF PARKING SPACES:	129
NUMBER OF NEW STD. SPACES:	120
NUMBER OF NEW H.C. SPACES:	9
BUILDING SQUARE FOOTAGE:	69,984 SF
CLASSROOM SQUARE FOOTAGE:	26,581 SF

SITE PLAN NOTES:

1. SIDEWALK WITHIN RIGHT-OF-WAY THAT IS TO BE REMOVED AND REPLACED DUE TO UTILITY INSTALLATION OR ENTRANCE DRIVE CONSTRUCTION SHALL BE PER C-GC-46A.
2. PIPING WITHIN THE RIGHT-OF-WAY CONNECTING TO PUBLIC STORM SEWER SHALL BE INSTALLED WITH GRANULAR TYPE A BACKFILL PER C-GC-26.
3. PROPOSED DRIVE ENTRANCES WITHIN RIGHT-OF-WAY TO BE CONSTRUCTED PER C-GC-41B.
4. CURB AND GUTTER WITHIN RIGHT-OF-WAY AT PROPOSED DRIVE ENTRANCES ALONG HOOVER RD. TO BE REMOVED AND REPLACED PER C-GC-57B/C-GC-41A. SIDEWALKS CROSSING THE PREPAVED ENTRANCES SHALL BE ADA COMPLAINT PER C-GC-46.
5. ALL ROOFTOP MOUNTED SERVICE/MECHANICAL EQUIPMENT SHALL BE PAINTED TO MATCH THE BRICK COLOR.

ZONING

EXISTING ZONING: SD-1 EDUCATIONAL
PROPOSED ZONING: SD-1 EDUCATIONAL

UTILITY NOTES

1. ALL ENDWALLS SHALL BE PER CITY OF GROVE CITY STANDARD DRAWING C-GC-23.
2. ALL HEADWALLS SHALL HAVE STONE FACING CONSISTING OF NORTH SHORE BUFF LIMESTONE PER CITY OF GROVE CITY REQUIREMENTS.
3. SITE IS NOT WITHIN THE 100-YEAR FLOODPLAIN ACCORDING TO FEMA MAP NO. 39049C0314K.
4. ALL WATERMAIN CROSSINGS SHALL MAINTAIN A VERTICAL SEPARATION OF 18" MINIMUM. SANITARY SEWER SHALL BE LOCATED A MINIMUM OF 18" BELOW WATERMAIN AT ALL CROSSINGS.

LEGEND

PROPOSED SYMBOLS

- PROPOSED STORM PIPE
- PROPOSED SANITARY PIPE
- PROPOSED WATER PIPE
- CB — PROPOSED CATCH BASIN
- MH — PROPOSED STORM MANHOLE
- MH — PROPOSED SANITARY MANHOLE/CLEANOUT
- PROPOSED FIRE HYDRANT
- DS — PROPOSED DOWNSPOUT
- CO — PROPOSED CLEANOUT
- PROPOSED CONCRETE
- PROPOSED ASPHALT PAVEMENT
- PROPOSED HEAVY DUTY CONCRETE
- PROPOSED PLANING AND OVERLAY
- PROPOSED DRIVE APPROACH PER C-GC-41B.

EXISTING SYMBOLS

- CONCRETE MONUMENT FOUND
- 5/8" IRON PIN FOUND
- 5/8" CAPPED IRON PIN SET
- 1" IRON PIPE FOUND
- NAIL SET
- BENCHMARK
- EX. UTILITY POLE
- EX. GUY WIRE
- UE — EX. UNDERGROUND ELECTRIC
- E — EX. OVERHEAD ELECTRIC
- AC — EX. HVAC UNIT
- TF — EX. TRANSFORMER
- EX. GROUND LIGHT
- E — EX. ELECTRIC BOX
- EX. LIGHT POLE
- UT — EX. UNDERGROUND TELEPHONE
- T — EX. OVERHEAD TELEPHONE
- T — EX. TELEPHONE MANHOLE
- T — EX. TELEPHONE PEDESTAL
- G — EX. GAS MAIN
- GV — EX. GAS VALVE
- UCATV — EX. UNDERGROUND CABLE TV
- W — EX. WATER MAIN
- EX. FIRE HYDRANT
- WV — EX. WATER VALVE
- WM — EX. WATER METER
- ICV — EX. IRRIGATION CONTROL VALVE
- EX. MANHOLE
- CO — EX. CLEAN OUT
- EX. SANITARY SEWER
- EX. STORM SEWER
- EX. CATCH BASIN
- EX. INLET
- YD — EX. YARD DRAIN
- DS — EX. DOWN SPOUT
- TR — EX. TRAFFIC CONTROL CABINET
- TRP — EX. TRAFFIC SIGNAL POLE
- EX. SIGN
- GP — EX. GUARD POST (PIPE BOLLARD)
- FP — EX. FLAG POLE
- X — EX. FENCE
- SB — EX. SOIL BORING
- EX. HARDWOOD TREE

N
0 20 40 80

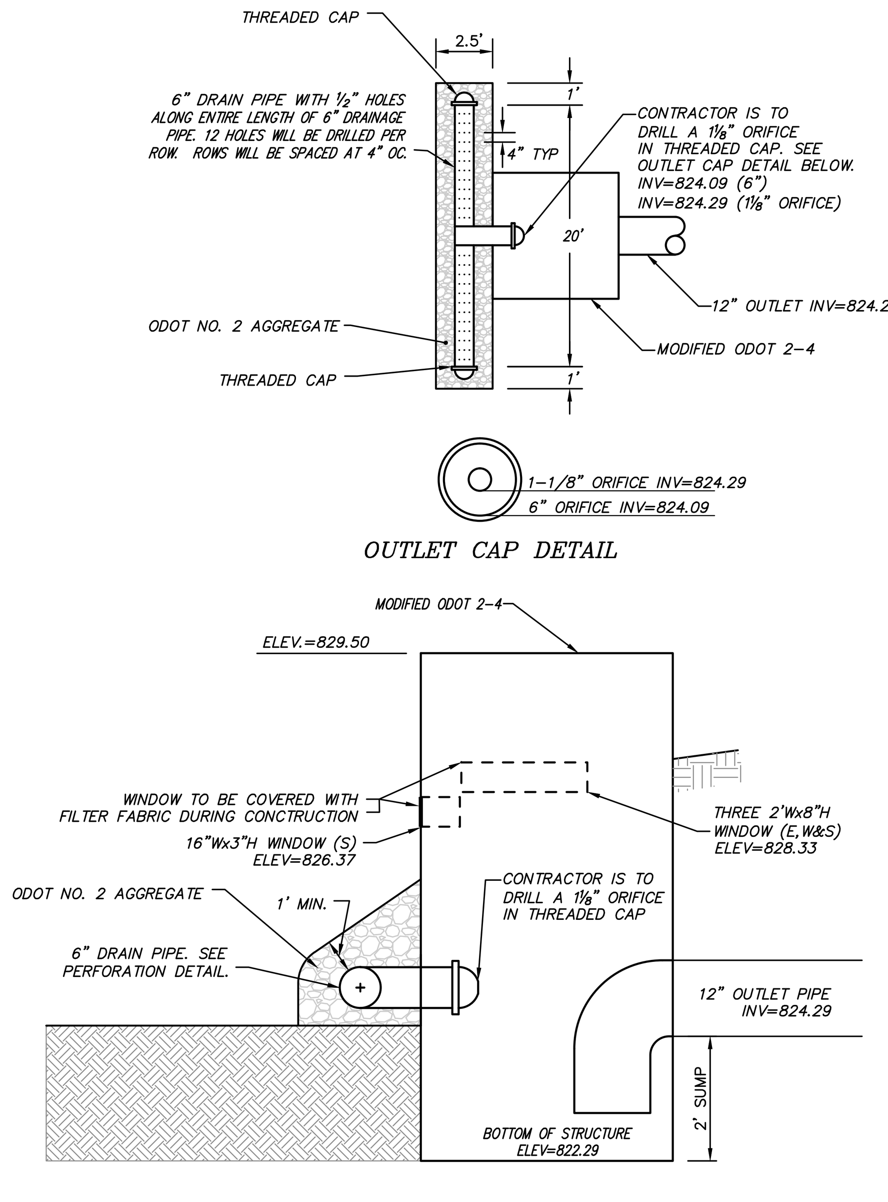

DETENTION / WATER QUALITY OUTFALL STRUCTURE 2
N.T.S.

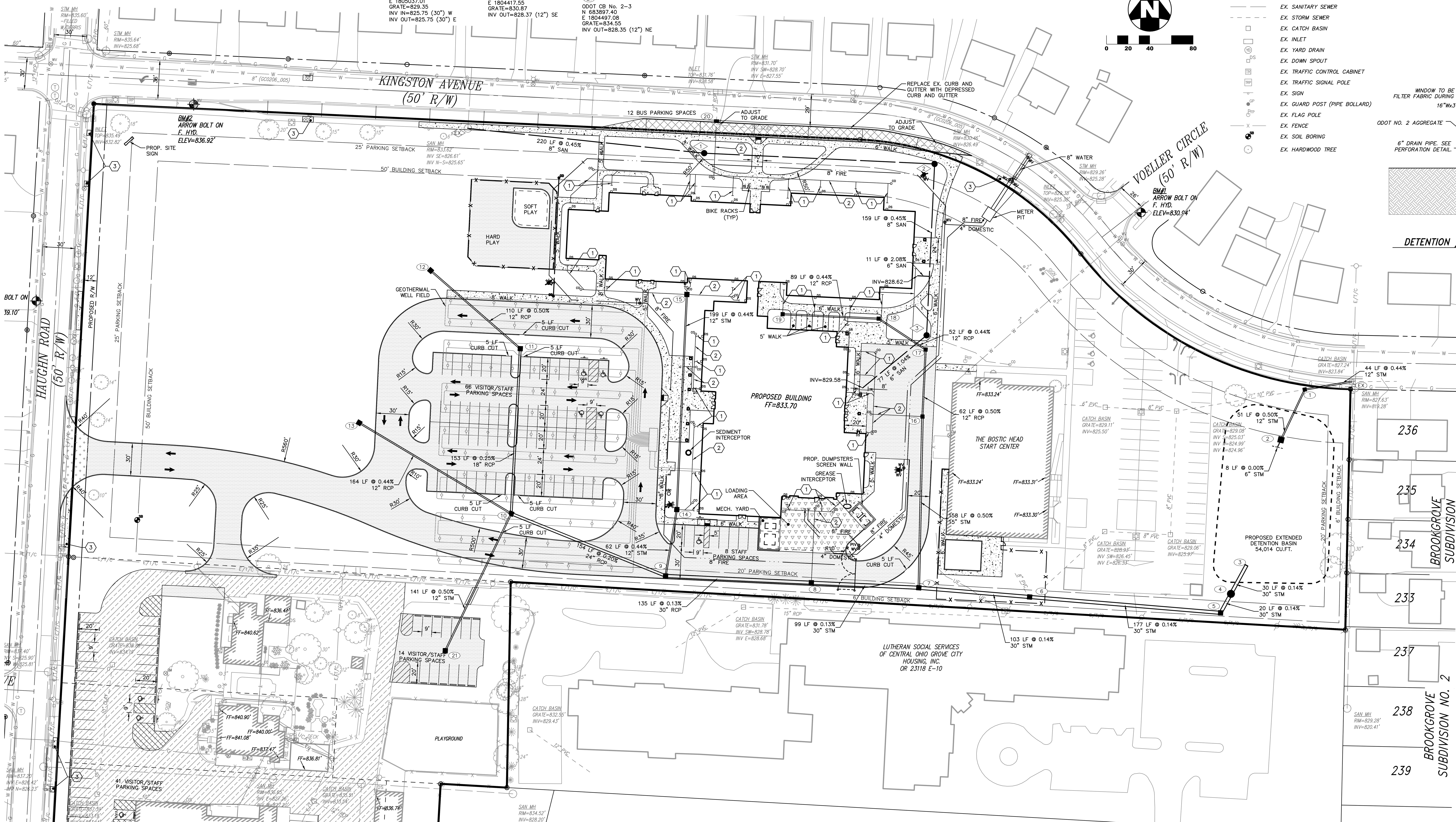

CODED NOTES

1. 8" STM @ 1.00% MIN
2. 12" STM @ 0.50% MIN
3. REMOVE AND REPLACE WALK AT NEAREST JOINT

CONSTRUCTION PHASING

CONSTRUCTION ACTIVITIES WILL BE PHASED TO PERMIT THE OPERATION OF THE EXISTING ELEMENTARY AND HEAD START BUILDINGS. THE EXISTING ELEMENTARY BUILDING SHALL BE OCCUPIED FOR THE DURATION OF PHASE 1; THE HEAD START BUILDING WILL BE OCCUPIED THROUGH THE DURATION OF THE PROJECT.

PHASE 1 SHALL CONSIST OF SELECTIVE SITE DEMOLITION EAST OF THE EXISTING ELEMENTARY BUILDING AND PARTIAL DEMOLITION OF THE EXISTING ELEMENTARY BUILDING TO ALLOW FOR PREPARATION OF THE BUILDING PAD. THE PROPOSED BUILDING AND SUPPORTING INFRASTRUCTURE IN THE SAME AREA SHALL ALSO BE COMPLETED. THE PLAYGROUND ON THE WEST SIDE OF THE HEAD START BUILDING SHALL BE RELOCATED TO THE SOUTH SIDE OF THE BUILDING.

PHASE 2 CONSISTS OF THE DEMOLITION OF THE EXISTING ELEMENTARY BUILDING, PARKING LOTS, AND UTILITIES. PROPOSED PARKING LOTS, WALKS, UTILITIES, AND PERMANENT SEEDING SHALL BE COMPLETED.

STATE OF OHIO
MICHAEL J. COUVREUR
E-70851
REGISTERED PROFESSIONAL ENGINEER

THE KLEINGERS GROUP
CIVIL ENGINEERING
SURVEYING
LANDSCAPE ARCHITECTURE
www.kleingers.com
350 Worthington Rd, Ste B
Westerville, OH 43082
614.882.4311

OHIO Utilities Protection SERVICE
811 or 1-800-362-2764
Call Before You Dig

SHP LEADING DESIGN
4805 Montgomery Road, Cincinnati, Ohio 45212 — Suite 400, 513-381-2112
236 High Street, Hamilton, Ohio 45011 — 513-863-5441
250 Civic Center Drive, Columbus, Ohio 43215 — Suite 200, 614-223-2124
1675 Broadway, Denver, Colorado 80202 — Suite 1300, 303-209-7866

City Administrator ______
Service Director ______
Review for the City of Grove City ______
Jackson Township Fire Department ______

DEVELOPMENT PLAN
CITY PROJECT NO. ______

J.C. SOMMER ELEMENTARY SCHOOL

3055 Kingston Ave., Grove City, Ohio 43123

SOUTH-WESTERN CITY SCHOOL DISTRICT

3805 Marlane Drive, Grove City, OH 43123

SITE PLAN

DATE 12/17/13

C110

8/24/2012 10:06:03 AM

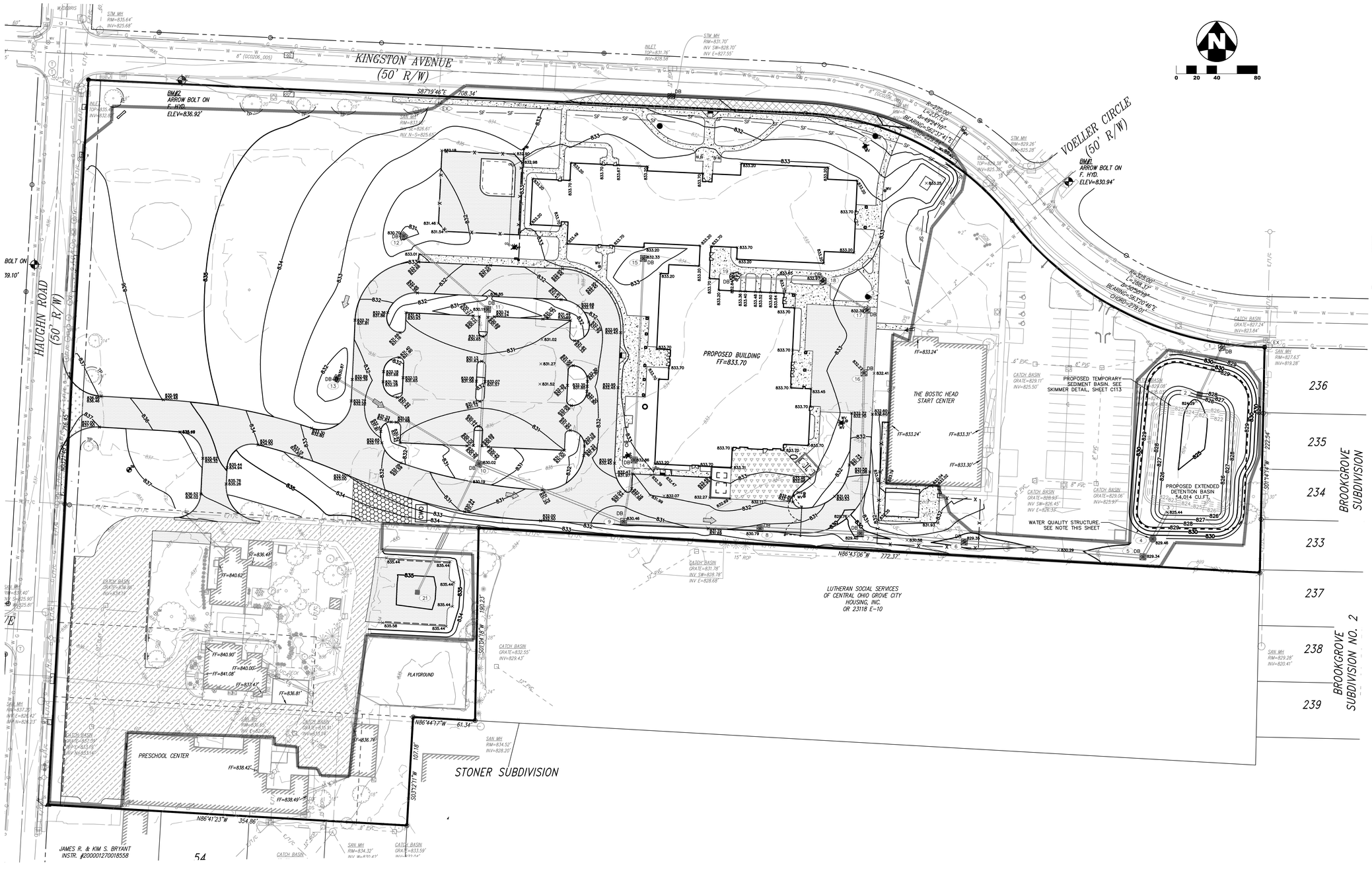

GRADING LEGEND

830	EX CONTOUR
829	EX CONTOUR
830	PROPOSED CONTOUR
829	PROPOSED CONTOUR
	FLOOD ROUTE

EROSION CONTROL LEGEND

DB	DANDY BAG
SF	SILT FENCE, SEE DETAIL SHEET C113
TP	TREE PROTECTION, SEE DETAIL SHEET C113
	CONSTRUCTION ENTRANCE DETAIL, SEE DETAIL SHEET C113
CWO	CONCRETE WASHOUT DETAIL, SEE DETAIL SHEET C113
	LIMITS OF DISTURBANCE

WATER QUALITY TREATMENT STRUCTURE NOTE
WATER QUALITY TREATMENT STRUCTURE SHALL BE A CONTECH CDS3035 6' DIAMETER STRUCTURE OR APPROVED EQUAL. STRUCTURE SHALL HAVE MINIMUM TREATMENT CAPACITY OF 3.8 CFS AND A MINIMUM INTERNAL BYPASS CAPACITY OF 20 CFS.

STATE OF OHIO
MICHAEL J. COUVREUR
E-70851
REGISTERED
PROFESSIONAL ENGINEER

THE KLEINGERS GROUP
CIVIL ENGINEERING
SURVEYING
LANDSCAPE ARCHITECTURE
www.kleingers.com
350 Worthington Rd, Ste B
Westerville, OH 43082
614.882.4311

OHIO Utilities Protection SERVICE
811 or 1-800-362-2764
Call Before You Dig

SHP LEADING DESIGN
4805 Montgomery Road, Cincinnati, Ohio 45212, Suite 400, 513-381-2112
236 High Street, Hamilton, Ohio 45011, 513-863-5441
250 Civic Center Drive, Columbus, Ohio 43215, Suite 200, 614-223-2124
1675 Broadway, Denver, Colorado 80202, Suite 1300, 303-209-7866

DEVELOPMENT PLAN
CITY PROJECT NO. _____

J.C. SOMMER ELEMENTARY SCHOOL
3055 Kingston Ave., Grove City, Ohio 43123

SOUTH-WESTERN CITY SCHOOL DISTRICT
3805 Marlane Drive, Grove City, OH 43123

GRADING AND EROSION CONTROL PLAN

DATE 12/17/13

C111

8/24/2012 10:06:03 AM

OHIO EPA
NPDES STORMWATER CONSTRUCTION PERMIT
GENERAL PERMIT #OHC000004

PERMITTEE:	OWNER:
SOUTH-WESTERN CITY SCHOOL DISTRICT 3805 MARLANE DRIVE GROVE CITY, OHIO 43123 (614) 801-3000	SOUTH-WESTERN CITY SCHOOL DISTRICT 3805 MARLANE DRIVE GROVE CITY, OHIO 43123 (614) 801-3000

NPDES PERMIT: ________

DATE OF ISSUE: ________

CENTER OF PROJECT

LATITUDE: N 39°52'36.34" LONGITUDE: W 83°05'02.46"

PROJECT DESCRIPTION

NEW ELEMENTARY SCHOOL IN GROVE CITY, FRANKLIN COUNTY, OHIO, INCLUDING THE SCHOOL BUILDING, PLAY FIELDS, PARKING LOTS, SANITARY SEWERS, STORM SEWERS, WATERLINES AND OTHER RELATED UTILITIES. SOIL DISTURBING ACTIVITIES WILL INCLUDE: CLEARING AND GRUBBING INSTALLATION OF EROSION AND SEDIMENT CONTROLS, GRADING, INSTALLATION OF THE SEWERS AND OTHER UTILITIES AND THE PREPARATION FOR FINAL SEEDING.

PROJECT DATA

TOTAL SITE AREA:	12.99 ACRES
TOTAL DISTURBED AREA:	8.63 ACRES
PROPOSED IMPERVIOUS AREA:	3.59 ACRES
EXISTING IMPERVIOUS AREA:	2.90 ACRES
RUNOFF COEFFICIENT FOR PRE-CONSTRUCTION:	C=0.58
RUNOFF COEFFICIENT FOR POST-CONSTRUCTION*:	C=0.62
PRIOR LAND USE:	ELEMENTARY SCHOOL
RECEIVING WATER:	MUNICIPAL SEWER TO UNNAMED TRIBUTARY TO SCIOTO RIVER
ESTIMATED CONSTRUCTIONS DATES:	_______
SOIL TYPES, DESCRIPTIONS:	_______

EMERGENCY ACTION & SPILL PREVENTION PLAN

THE SCOPE OF WORK COVERED BY THIS PLAN INCLUDES EMERGENCY RESPONSE TO SPILLS, CONTAINMENT OF SPILLED LIQUIDS, EMERGENCY NOTIFICATION NUMBERS, AND SOIL EXCAVATION FOR SPILL CLEAN-UP.

IN THE EVENT OF A SPILL EVENT THE EMPLOYEE SHALL ASSESS THE SPILL AND IMMEDIATELY NOTIFY THE SAFETY OFFICER AND SUPERVISOR IN CHARGE, OR OTHER INDIVIDUALS AS LISTED BELOW.

TITLE	NAME	PHONE NUMBER
SITE SUPERINTENDENT	_________	__________
OWNER	MARK WALLER	614-801-3133

IMMEDIATELY AFTER NOTIFICATION, THE EMPLOYEE WILL BE DIRECTED BY THE SAFETY OFFICER, OR RESPONSIBLE PARTY TO START CONTAINMENT PROCEDURES TO PREVENT THE MATERIAL FROM REACHING THE STORM SEWERS, DRAINAGE DITCH, AND OTHER OUTLETS USING THE FOLLOWING ACTIONS OR ANY OTHER MEANS NECESSARY WITHOUT COMPROMISING WORKER SAFETY:

1) CLEAR PERSONNEL FROM THE SPILL AREA AND ROPE OFF AREA.
2) STOP THE SPILL.
3) USE SORBENT MATERIALS, PLUG PUTTY, OR HOLE PUTTY AS NECESSARY TO CONTROL THE SPILL AT THE SOURCE.
4) CONSTRUCT A TEMPORARY CONTAINMENT DIKE OF SORBENT MATERIALS OR DIRT TO CONTAIN SPILL.

SPILL KITS WILL BE LOCATED ON THE PROJECT AS DESIGNATED ON THE SWPPP PLAN.

UPON COMPLETION OF CONTAINMENT OPERATIONS, PROPER CLEAN-UP PROCEDURES WILL BE IMPLEMENTED IN ACCORDANCE WITH REGULATORY PROCEDURES.

ADDITIONAL EMERGENCY CONTACT NUMBERS:	24 HOUR PHONE NO.:
____	__________
____	__________
____	__________
____	__________
OHIO EPA	614-728-3898

GENERAL NOTES

THE CONTRACTOR IS HEREBY ADVISED THAT STRICTER POLLUTION CONTROL STANDARDS AND ENFORCEMENT HAVE BEEN IMPOSED BY THE OHIO EPA SINCE MARCH 10, 2003 AND WITH A REVISION IN APRIL 2008. ALSO, MANY PRIVATE CITIZEN ENVIRONMENTAL GROUPS, WHO HAVE BEEN KNOWN TO FILE CIVIL LEGAL ACTIONS, ARE PRESENT IN THE AREA AND OBSERVE ALL CONSTRUCTION OPERATIONS.

THE CONTRACTOR SHALL INFORM ALL SUBCONTRACTORS OF THE REQUIREMENTS AND RESPONSIBILITIES OF THE SWPPP AND SHALL DOCUMENT ALL SUCH NOTIFICATIONS AND/OR DISCUSSIONS. ALL SUBCONTRACTORS SHALL SIGN THE NOI.

THE CONTRACTOR WILL BE REQUIRED TO PARTICIPATE IN SEDIMENT AND EROSION CONTROL INSPECTIONS ON A WEEKLY BASIS AND SIGN AN APPROVED INSPECTION SHEET THAT SHALL BE KEPT ON FILE AT THE JOB SITE.

UNLESS OTHERWISE NOTED, STANDARDS AND SPECIFICATIONS ESTABLISHED IN THE LATEST EDITION OF THE ODNR "RAINWATER AND LAND DEVELOPMENT" HANDBOOK SHALL GOVERN THE EROSION AND SEDIMENT CONTROL INSTALLATIONS SPECIFIED ON THIS PLAN.

THIS PROJECT WILL INVOLVE SEVERAL CONSTRUCTION PHASES AND SEQUENCING THROUGHOUT ITS LIFETIME. IT IS VERY IMPORTANT THAT ALL TEMPORARY SEDIMENT AND EROSION CONTROL (S&EC) FIELD METHODS ALONG WITH THIS PLAN, ARE UPDATED TO REFLECT THE ACTUAL FIELD CONDITIONS, CURRENT WEATHER CONDITIONS AND SITE GRADE CHANGES. THE CONTRACTOR, OWNER, ENGINEER OR THE OHIO EPA CAN AND WILL MODIFY THIS PLAN AS NECESSARY.

THE CONTRACTOR WILL VOLUNTARILY SELF REPORT ANY POTENTIAL VIOLATIONS OF THE OEPA NPDES PERMIT TO THE OWNER, ENGINEER AND THE OEPA.

THE CONTRACTOR SHALL REMOVE EXISTING GROUND COVER ONLY AS NECESSARY FOR THE PROJECT PHASE CURRENTLY UNDER CONSTRICTION.

CONSTRUCTION AND DEMOLITION DEBRIS SHALL BE PROPERLY DISPOSED OF ACCORDING TO OHIO EPA REQUIREMENTS.

THE CONTRACTOR WILL BE REQUIRED TO BUILD SEDIMENT BASINS OR SEDIMENT TRAPS OR USE EQUAL METHODS TO DETAIN AND CLEAN WATER TO ACCEPTABLE EPA STANDARDS BEFORE RELEASING THE WATER BACK INTO THE STREAM.

ALL DEWATERING ACTIVITY SHALL BE CARRIED OUT IN ACCORDANCE WITH THE PRACTICES OUTLINED IN PART III.G.2.G.IV OF THE OEPA GENERAL PERMIT.

THERE SHALL BE NO TURBID DISCHARGES TO SURFACE WATERS, RESULTING FROM DEWATERING ACTIVITIES. SEDIMENT-LADEN WATER MUST PASS THROUGH A SETTLING POND, FILTER BAG, OR OTHER COMPARABLE PRACTICE, PRIOR TO DISCHARGE.

NO SOLID OR LIQUID WASTE SHALL BE DISCHARGED INTO STORM WATER RUNOFF.

ALL PROCESS WASTEWATER (EQUIPMENT WASHING, LEACHATE FROM ON-SITE WASTE DISPOSAL, ETC.) SHALL BE COLLECTED AND DISPOSED OF AT A PUBLICLY OWNED TREATMENT WORKS.

ALL CONSTRUCTION ACTIVITIES MUST COMPLY WITH ALL LOCAL EROSION/SEDIMENT CONTROL, WASTE DISPOSAL, SANITARY AND HEALTH REGULATIONS.

OTHER EROSION CONTROL ITEMS MAY BE NECESSARY DUE TO ENVIRONMENTAL CONDITIONS. THE CONTRACTOR SHALL BE RESPONSIBLE FOR INSTALLATION AND IMPLEMENTATION OF ADDITIONAL EROSION CONTROL ITEMS, AT THE ENGINEER'S DISCRETION.

NO SOIL, ROCK, DEBRIS OR OTHER MATERIAL SHALL BE DUMPED OR PLACED IN ANY AREAS NOT ADEQUATELY PROTECTED BY EROSION CONTROL INSTALLATIONS.

IT IS PREFERRED TO USE PERMANENT EROSION CONTROL ITEMS AS SHOWN IN THE PLANS TO CONTROL CONSTRUCTION POLLUTION WHEN POSSIBLE. OTHERWISE, THE TEMPORARY POLLUTION PREVENTION ITEMS ARE TO BE USED.

MOST TEMPORARY S&EC METHODS, INCLUDING BUT NOT LIMITED TO, SILT FENCE AND DITCH CHECKS MAY ALL HAVE TO BE PERIODICALLY REMOVED AND REPLACED, OR MOVED FROM THE EXISTING ROAD DITCH OR STRIPPED AREAS AS WORK PROGRESSES. ANY CHANGES SHALL BE NOTED IN THE PLAN BY RED LINE AND DATED ON A CORRECTIVE ACTION LOG.

ALL TEMPORARY SEDIMENT CONTROLS AND STORM WATER QUALITY METHODS WILL BE BUILT/INSTALLED AS THE PROJECT PROGRESSES TO ELIMINATE UNNECESSARY DISTURBANCE AND REDUNDANCY. ALL TEMPORARY CONTROLS SHALL BE IN PLACE AND FUNCTIONING PROPERLY WHEN THREATENING WEATHER IS IMMINENT.

"TEMPORARY STABILIZATION" MEANS THE ESTABLISHMENT OF TEMPORARY VEGETATION, MULCHING, GEOTEXTILES, SOD, PRESERVATION OF EXISTING VEGETATION AND OTHER TECHNIQUES CAPABLE OF QUICKLY ESTABLISHING COVER OVER DISTURBED AREAS TO PROVIDE EROSION CONTROL BETWEEN CONSTRUCTION OPERATIONS.

"PERMANENT STABILIZATION" MEANS THE ESTABLISHMENT OF PERMANENT VEGETATION, DECORATIVE LANDSCAPE MULCHING, MATTING, SOD, RIP RAP AND LANDSCAPING TECHNIQUES TO PROVIDE PERMANENT EROSION CONTROL ON AREAS WHERE CONSTRUCTION OPERATIONS ARE COMPLETE OR WHERE NO FURTHER DISTURBANCE IS EXPECTED FOR AT LEAST A YEAR.

OFF-SITE TRACKING OF SEDIMENTS SHALL BE MINIMIZED. A STABILIZED CONSTRUCTION ENTRANCE WILL BE PROVIDED TO HELP REDUCE VEHICLE TRACKING OF SEDIMENTS. ALL PAVED STREETS ADJACENT TO THE SITE WILL BE SWEPT DAILY TO REMOVE ANY EXCESS MUD, DIRT OR ROCK TRACKED FROM THE SITE. DUMP TRUCKS HAULING MATERIAL FROM THE CONSTRUCTION SITE WILL BE COVERED WITH A TARP.

OPERATION SEQUENCE FOR TEMPORARY AND PERMANENT BMP INSTALLATION

TO COMPLETE THE EXCAVATION AND CONSTRUCTION OF THE PROPOSED JOB IMPROVEMENTS, COORDINATION OF THE CONTRACTOR'S WORK CREWS WILL BE REQUIRED. TEMPORARY SEDIMENT CONTROL AND STORAGE DURING THE PROPOSED CONSTRUCTION WILL OCCUR IN TEMPORARY SEDIMENT TRAPS. WORK WILL GENERALLY PROCEED FROM DOWNSTREAM TO UPSTREAM IN THESE WORK AREAS. THE GENERAL CONSTRUCTION SEQUENCE IS AS FOLLOWS:

A) INSTALL PERIMETER EROSION CONTROL ITEMS AND INLET PROTECTION EXISTING STRUCTURES. EXCAVATE SEDIMENT BASIN AND INSTALL OUTLET AND SKIMMER DEVICE.

B) BEGIN PHASE 1 CONSTRUCTION – EAST OF THE EXISTING SCHOOL BUILDING.

C) STRIP TOPSOIL AND ANY UNSUITABLE MATERIAL THROUGH THE INCREMENTAL WORK AREA FOR PHASE 1. STOCKPILE TOPSOIL ONSITE AND MAINTAIN WITH TEMPORARY SEEDING.

D) INSTALL ALL TEMPORARY SEDIMENT CONTROLS WITHIN 24 HOURS FOLLOWING THE STRIPPING OPERATION. USE TEMPORARY DIVERSION CHANNELS TO ROUTE RUNOFF TO SEDIMENT BASIN PRIOR TO THE INSTALLATION OF THE PROPOSED STORM SEWER SYSTEM.

E) PERFORM MASS GRADING FOR BUILDING PAD AND PARKING AREAS.

F) INSTALL SITE UTILITIES IN THE PHASE 1 AREA AND INSTALL INLET PROTECTION ON NEW STRUCTURES AS WORK PROGRESSES.

G) ANY DISTURBED OR EXPOSED AREAS SHALL BE STABILIZED PER OEPA TEMPORARY AND PERMANENT STABILIZATION REGULATIONS INCLUDING:

1. SEEDING 2. DITCH MATTING 3. INLET PROTECTION
4. MULCHING 5. WATERING

H) UPON COMPLETION OF PHASE 1; BEGIN PHASE 2 WITH DEMOLITION OF EXISTING BUILDING AND PARKING LOTS.

I) STRIP AND STOCKPILE ANY REMAINING TOPSOIL. MASS GRADE REMAINING PHASE 2 AREAS

J) INSTALL REMAINING SITE UTILITIES AND INSTALL INLET PROTECTION AS WORK PROGRESSES.

K) INSTALL FINAL PAVING AND PERMANENT SEEDING.

L) PROVIDE PERMANENT STABILIZATION FOR ANY DISTURBED AREAS AND REMOVE TEMPORARY SEDIMENT CONTROLS, PERIMETER CONTROLS, AND INLET PROTECTION. EXCAVATE ACCUMULATED SEDIMENT FROM SEDIMENT BASIN AND REMOVE SKIMMER DEVICE. STABILIZE DETENTION BASIN AREA.

STABILIZATION PRACTICES

PERMANENT SEEDING AND MULCHING STABILIZATION SHALL BE PROVIDED PER OEPA GUIDELINES AS SET FORTH IN PART II.B OF OHIO EPA PERMIT NO.: OHC000004. (SEE TABLE 1)

TABLE 1: PERMANENT STABILIZATION

AREA REQUIRING PERMANENT STABILIZATION	TIME FRAME TO APPLY EROSION CONTROLS
ANY AREAS THAT WILL LIE DORMANT FOR ONE YEAR OR MORE	WITHIN SEVEN DAYS OF THE MOST RECENT DISTURBANCE
ANY AREAS WITHIN 50 FEET OF A SURFACE WATER OF THE STATE AND AT FINAL GRADE	WITHIN TWO DAYS OF REACHING FINAL GRADE
ANY OTHER AREAS AT FINAL GRADE	WITHIN SEVEN DAYS OF REACHING FINAL GRADE WITHIN THAT AREA

TEMPORARY SEEDING AND MULCHING STABILIZATION SHALL BE PROVIDED PER OEPA GUIDELINES AS SET FORTH IN PART II.B OF OHIO EPA PERMIT NO.: OHC000004. (SEE TABLE 2)

TABLE 2: TEMPORARY STABILIZATION

AREA REQUIRING TEMPORARY STABILIZATION	TIME FRAME TO APPLY EROSION CONTROLS
ANY DISTURBED AREAS WITH 50 FEET OF A SURFACE WATER OF THE STATE AND NOT AT FINAL GRADE	WITHIN TWO DAYS OF THE MOST RECENT DISTURBANCE IF THE AREA WILL REMAIN IDLE FOR MORE THAN 14 DAYS
FOR ALL CONSTRUCTION ACTIVITIES, ANY DISTURBED AREAS THAT WILL BE DORMANT FOR MORE THAN 14 DAYS BUT LESS THAN ONE YEAR, AND NOT WITHIN 50 FEET OF A SURFACE WATER OF THE STATE	WITHIN SEVEN DAYS OF THE MOST RECENT DISTURBANCE WITHIN THE AREA FOR RESIDENTIAL SUBDIVISIONS, DISTURBED AREAS MUST BE STABILIZED AT LEAST SEVEN DAYS PRIOR TO TRANSFER OF PERMIT COVERAGE FOR THE INDIVIDUAL LOT(S).
DISTURBED AREAS THAT WILL BE IDLE OVER WINTER	PRIOR TO THE ONSET OF WINTER WEATHER

ALL TEMPORARY EROSION AND SEDIMENT CONTROL INSTALLATIONS SHALL BE REMOVED WHEN 70% VEGETATION HAS BEEN REACHED.

SEEDING & MULCHING

MULCH AND/OR OTHER APPROPRIATE VEGETATIVE PRACTICES SHALL BE APPLIED TO DISTURBED AREAS WITHIN 7 DAYS OF GRADING IF THE AREA IS TO REMAIN DORMANT (UNDISTURBED) FOR MORE THAN 14 DAYS ON AREAS AND PORTIONS OF THE SITE WHICH CAN BE BROUGHT TO FINAL GRADE.

MULCH SHALL CONSIST OF UNROTTED SMALL GRAIN STRAW APPLIED AT THE RATE OF 3 TONS/AC. OR 138 LB./1000 SQ. FT. (TWO TO THREE BALES). THE STRAW MULCH SHALL BE SPREAD UNIFORMLY BY HAND OR MECHANICALLY SO THE SOIL SURFACE IS COVERED. FOR UNIFORM DISTRIBUTION OF HAND-SPREAD MULCH, DIVIDE AREA INTO APPROXIMATELY 1000-SQ.-FT. SECTIONS AND PLACE THREE 45-LB. BALES OF STRAW IN EACH SECTION.

MULCH SHALL BE ANCHORED IMMEDIATELY TO MINIMIZE LOSS BY WIND OR RUNOFF. THE FOLLOWING ARE ACCEPTABLE METHODS FOR ANCHORING MULCH:

1) MECHANICAL-USE A DISK, CRIMPER, OR SIMILAR TYPE TOOL SET STRAIGHT TO PUNCH OR ANCHOR THE MULCH MATERIAL INTO THE SOIL. STRAW MECHANICALLY ANCHORED SHALL NOT BE FINELY CHOPPED BUT BE LEFT GENERALLY LONGER THAN 6 IN.

2) MULCH NETTINGS-USE ACCORDING TO THE MANUFACTURER'S RECOMMENDATIONS, FOLLOWING ALL PLACEMENT AND ANCHORING SUGGESTIONS. USE IN AREAS OF WATER CONCENTRATION AND STEEP SLOPES TO HOLD MULCH IN PLACE.

3) ASPHALT EMULSION-FOR STRAW MULCH, APPLY AT THE RATE OF 160 GAL./AC. (0.1 GAL./SY) INTO THE MULCH AS IT IS BEING APPLIED OR AS RECOMMENDED BY THE MANUFACTURE.

4) SYNTHETIC BINDERS-FOR STRAW MULCH, SYNTHETIC BINDERS SUCH AS ACRYLIC DLR (AGRI-TAC), DCA-70, PETROSET, TERRA TACK OR EQUAL MAY BE USED AT RATES RECOMMENDED BY THE MANUFACTURER.

TEMPORARY SEEDING & MULCHING FOR EROSION CONTROL

SEED TYPE	PER 1000 SQ FT	PER ACRE
PERENNIAL RYEGRASS TALL FESCUE ANNUAL RYEGRASS	1 POUND 1 POUND 1 POUND	40 POUNDS 40 POUNDS 40 POUNDS
SMALL GRAIN STRAW	90 POUNDS	2 TONS
FERTILIZER	6 POUNDS OF 10-10-10 OR 12-12-12	250 POUNDS OF 10-10-10 OR 12-12-12

NOTE: OTHER APPROVED SPECIES MAY BE SUBSTITUTED

WINTER SEEDING & MULCHING

WINTER SEED AND MULCH IS REQUIRED FOR EARTH DISTURBANCE ACTIVITY OPERATIONS OCCURRING BETWEEN OCTOBER 15 AND MARCH 15 AND CAN ONLY BE INSTALLED DURING THAT TIME. ALL STRAW MULCH INCLUDED IN THIS WORK MUST BE EITHER CRIMPED IN PLACE OR INSTALLED WITH A BIODEGRADABLE BONDED FIBER MATRIX. CRIMPED MULCH IS REQUIRED TO BE ANCHORED INTO THE SOIL SURFACE WITH A MECHANICAL CRIMPING IMPLEMENT OR OTHER SUITABLE IMPLEMENT APPROVED BY THE ENGINEER. THE MULCH INCLUDED IN THIS WORK MUST BE CAPABLE OF PROVIDING SUFFICIENT DURABLE PROTECTIVE COVER THAT PROVIDES OEPA NPDES PERMIT COMPLIANT EROSION CONTROL FOR A MINIMUM OF 6 MONTHS. THE USE OF OTHER SEED AND/OR MULCH MATERIALS IN THIS TIME PERIOD REQUIRES SPECIFIC APPROVAL BY THE ENGINEER. THE USE OF WINTER SEEDING AND MULCHING IS NOT AN ACCEPTABLE PRACTICE FOR PROTECTING THE SUBGRADE SURFACE.

STOCKPILE

SILT FENCING SHALL BE INSTALLED AROUND TEMPORARY SPOIL STOCKPILES. THESE STOCKPILES SHALL BE STRAW MULCHED AND/OR TEMPORARILY SEEDED WITHIN 7 WORKING DAYS IF LEFT DORMANT FOR 14 DAYS OR LONGER.

TIMING OF CONTROLS/MEASURES

AS INDICATED IN THE SEQUENCE OF MAJOR ACTIVITIES, CONSTRUCTION ENTRANCE(S) AND SILT FENCE WILL BE CONSTRUCTED PRIOR TO CLEARING OR GRADING OF ANY OTHER PORTIONS OF THE SITE. SEDIMENT CONTROL DEVICES SHALL BE IMPLEMENTED FOR ALL AREAS REMAINING DISTURBED LONGER THAN 14 DAYS AND/OR WITHIN 7 DAYS OF ANY GRUBBING ACTIVITIES. AREAS WHERE CONSTRUCTION ACTIVITY TEMPORARILY CEASES FOR MORE THAN 14 DAYS WILL BE STABILIZED WITH A TEMPORARY SEED AND MULCH WITHIN 2 DAYS OF THE LAST DISTURBANCE IF THE AREA IS WITHIN 50 FEET OF A STREAM, AND WITHIN 7 DAYS OF THE LAST DISTURBANCE IF THE AREA IS MORE THAN 50 FEET AWAY FROM A STREAM. ONCE CONSTRUCTION ACTIVITY CEASES PERMANENTLY IN AN AREA, THAT AREA WILL BE STABILIZED WITH PERMANENT SEED AND MULCH. AFTER THE ENTIRE SITE IS STABILIZED, THE ACCUMULATED SEDIMENT WILL BE REMOVED FROM THE BASIN.

STABILIZATION TYPE	J	F	M	A	M	J	J	A	S	O	N	D
PERMANENT SEEDING			●	●	●	*	*	*	●	●		
DORMANT SEEDING	●	●	●							●	●	●
TEMPORARY SEEDING			●	●	●	*	*	*	●	●		
SODDING			**	**	**	**	**	**	**			
MULCHING	●	●	●	●	●	●	●	●	●	●	●	●

* – IRRIGATION NEEDED

** – IRRIGATION NEEDED FOR 2-3 WEEKS AFTER SOD IS APPLIED

INSPECTIONS

ALL BMPS ON THIS SITE SHALL BE INSPECTED BY THE CONTRACTOR OR DESIGNATED REPRESENTATIVE AT LEAST ONCE EVERY SEVEN CALENDAR DAYS AND WITHIN 24 HOURS AFTER A RAIN EVENT OF 0.5 INCHES PER 24 HOUR PERIOD. A RECORD OF THESE INSPECTIONS SHALL BE MAINTAINED IN THE CONSTRUCTION OFFICE WITH THE SWPPP FOR PUBLIC VIEWING. ANY VIOLATIONS WILL BE REPORTED THROUGH THE PROJECT PERSONNEL. A RAIN GAUGE WILL BE LOCATED WITHIN THE PROJECT LIMITS.

FOLLOWING EACH INSPECTION, A CHECKLIST MUST BE COMPLETED AND SIGNED BY THE QUALIFIED INSPECTION PERSONNEL REPRESENTATIVE. AT A MINIMUM, THE INSPECTION REPORT SHALL INCLUDE:

I. THE INSPECTION DATE;
II. NAMES, TITLES, AND QUALIFICATIONS OF PERSONNEL MAKING THE INSPECTION;
III. WEATHER INFORMATION FOR THE PERIOD SINCE THE LAST INSPECTION (OR SINCE COMMENCEMENT OF CONSTRUCTION ACTIVITY IF THE FIRST INSPECTION) INCLUDING A BEST ESTIMATE OF THE BEGINNING OF EACH STORM EVENT, DURATION OF EACH STORM EVENT, APPROXIMATE AMOUNT OF RAINFALL FOR EACH STORM EVENT (IN INCHES), AND WHETHER ANY DISCHARGES OCCURRED;
IV. WEATHER INFORMATION AND A DESCRIPTION OF ANY DISCHARGES OCCURRING AT THE TIME OF THE INSPECTION;
V. LOCATION(S) OF DISCHARGES OF SEDIMENT OR OTHER POLLUTANTS FROM THE SITE;
VI. LOCATION(S) OF BMPS THAT NEED TO BE MAINTAINED;
VII. LOCATION(S) OF BMPS THAT FAILED TO OPERATE AS DESIGNED OR PROVED INADEQUATE FOR A PARTICULAR LOCATION;
VIII. LOCATION(S) WHERE ADDITIONAL BMPS ARE NEEDED THAT DID NOT EXIST AT THE TIME OF INSPECTION; AND
IX. CORRECTIVE ACTION REQUIRED INCLUDING ANY CHANGES TO THE SWP3 NECESSARY AND IMPLEMENTATION DATES.

THE PERMITTEE SHALL MAINTAIN A RECORD OF ALL INSPECTIONS FOR A PERIOD OF 3 YEARS FOLLOWING THE SUBMITTAL OF THE NOTICE OF TERMINATION.

MAINTENANCE

THE CONTRACTOR SHALL MAINTAIN, REPAIR, OR REPLACE ALL EROSION CONTROL INSTALLATIONS AS NEEDED TO ENSURE THE CONTINUED PERFORMANCE OF THEIR INTENDED FUNCTION. ALL REPAIRS TO BMPS SHALL BE MADE WITHIN 3 DAYS (OR SOONER IF POSSIBLE) OF NOTIFICATION OF DEFICIENCIES. IF THE CORRECTIONS ARE NOT MADE WITHIN THE 3 DAY PERIOD, LIQUIDATED DAMAGES MAY BE ASSESSED AS PER THE ODOT CMS SECTION 108.27.

ONGOING INSPECTION OF INSTALLATIONS WILL BE PERFORMED BY THE CONTRACTOR OR DESIGNATED REPRESENTATIVE.

ANY TRAPPED SEDIMENT OR DEBRIS REMOVED DURING CLEANING OF OR REMOVAL OF BMP INSTALLATIONS SHALL BE PLACED IN AREAS NOT SUBJECT TO EROSION AND PERMANENTLY STABILIZED.

SPILL PREVENTION

MATERIAL MANAGEMENT PRACTICES:

THE FOLLOWING ARE THE MATERIAL MANAGEMENT PRACTICES THAT WILL BE USED TO REDUCE THE RISK OF SPILLS OR OTHER ACCIDENTAL EXPOSURE OF MATERIALS AND SUBSTANCES TO STORM WATER RUNOFF.

GOOD HOUSEKEEPING:

THE FOLLOWING GOOD HOUSEKEEPING PRACTICES WILL BE FOLLOWED ONSITE DURING THE CONSTRUCTION PROJECT.

1. AN EFFORT WILL BE MADE TO STORE ONLY ENOUGH PRODUCT REQUIRED TO DO THE JOB.
2. ALL MATERIALS STORED ONSITE WILL BE STORED IN A NEAT, ORDERLY MANNER IN THEIR APPROPRIATE CONTAINERS AND, IF POSSIBLE, UNDER A ROOF OR OTHER ENCLOSURE.
3. PRODUCTS WILL BE KEPT IN THEIR ORIGINAL CONTAINERS WITH THE ORIGINAL MANUFACTURER'S LABEL.
4. SUBSTANCES WILL NOT BE MIXED WITH ONE ANOTHER UNLESS RECOMMENDED BY THE MANUFACTURER.
5. WHENEVER POSSIBLE, ALL OF A PRODUCT WILL BE USED UP BEFORE DISPOSING OF THE CONTAINER.
6. MANUFACTURERS' RECOMMENDATIONS FOR PROPER USE AND DISPOSAL WILL BE FOLLOWED.
7. THE SITE SUPERINTENDENT WILL INSPECT DAILY TO ENSURE PROPER USE AND DISPOSAL OF MATERIALS ONSITE.

HAZARDOUS PRODUCTS:

THESE PRACTICES ARE USED TO REDUCE THE RISKS ASSOCIATED WITH HAZARDOUS MATERIALS.

1. PRODUCTS WILL BE KEPT IN ORIGINAL CONTAINERS UNLESS THEY ARE NOT RESEALABLE.
2. ORIGINAL LABELS AND MATERIAL SAFETY DATA WILL BE RETAINED; THEY CONTAIN IMPORTANT PRODUCT INFORMATION.
3. IF SURPLUS PRODUCT MUST BE DISPOSED OF, MANUFACTURERS' OR LOCAL AND STATE RECOMMENDED METHODS FOR PROPER DISPOSAL WILL BE FOLLOWED.

SPILL CONTROL PRACTICES

IN ADDITION TO THE GOOD HOUSEKEEPING AND MATERIAL MANAGEMENT PRACTICES DISCUSSED IN THE PREVIOUS SECTIONS OF THIS PLAN, THE FOLLOWING PRACTICES WILL BE FOLLOWED FOR SPILL PREVENTION AND CLEANUP:

1. ALL SPILLS SHALL BE CLEANED UP IMMEDIATELY AFTER DISCOVERY. MANUFACTURERS' RECOMMENDED METHODS FOR SPILL CLEANUP POSTED AND SITE PERSONNEL WILL BE MADE AWARE OF THE PROCEDURES AND THE LOCATION OF THE INFORMATION AND CLEANUP SUPPLIES.
2. MATERIALS AND EQUIPMENT NECESSARY FOR SPILL CLEANUP WILL BE KEPT IN THE MATERIAL STORAGE AREA ONSITE. EQUIPMENT AND MATERIALS WILL INCLUDE BUT NOT BE LIMITED TO BROOMS, DUST PANS, MOPS, RAGS, GLOVES, GOGGLES, KITTY LITTER, SAND, SAWDUST, AND PLASTIC AND METAL TRASH CONTAINERS SPECIFICALLY FOR THIS PURPOSE.
3. THE SPILL AREA WILL BE KEPT WELL VENTILATED AND PERSONNEL WILL WEAR APPROPRIATE PROTECTIVE CLOTHING TO PREVENT INJURY FROM CONTACT WITH A HAZARDOUS SUBSTANCE.
4. SPILLS OF TOXIC OR HAZARDOUS MATERIAL WILL BE REPORTED TO THE APPROPRIATE STATE OR LOCAL GOVERNMENT AGENCY, REGARDLESS OF THE SIZE. SPILLS OF 25 OR MORE GALLONS OF PETROLEUM WASTE MUST BE REPORTED TO OHIO EPA (1-800-282-9378), THE LOCAL FIRE DEPARTMENT, AND THE LOCAL EMERGENCY PLANNING COMMITTEE WITHIN 30 MINUTES OF THE SPILL.
5. SOILS CONTAMINATED BY PETROLEUM OR OTHER CHEMICAL SPILLS MUST BE TREATED/DISPOSED AT AN OHIO EPA APPROVED SOLID WASTE MANAGEMENT FACILITY OR HAZARDOUS WASTE TREATMENT, STORAGE OR DISPOSAL FACILITY (TSDF).
6. THE SPILL PREVENTION PLAN WILL BE ADJUSTED TO INCLUDE MEASURES TO PREVENT THIS TYPE OF SPILL FROM REOCCURRING AND HOW TO CLEAN UP THE SPILL IF THERE IS ANOTHER ONE. A DESCRIPTION OF THE SPILL, WHAT CAUSED IT, AND THE CLEANUP MEASURES WILL ALSO BE INCLUDED.
7. THE SITE SUPERINTENDENT RESPONSIBLE FOR THE DAY-TO-DAY SITE OPERATIONS, WILL BE THE SPILL PREVENTION AND CLEANUP COORDINATOR. HE WILL DESIGNATE SITE PERSONNEL WHO WILL RECEIVE SPILL PREVENTION AND CLEANUP TRAINING. THESE INDIVIDUALS WILL EACH BECOME RESPONSIBLE FOR A PARTICULAR PHASE OF PREVENTION AND CLEANUP. THE NAMES OF RESPONSIBLE SPILL PERSONNEL WILL BE POSTED IN THE MATERIAL STORAGE AREA AND IN THE OFFICE TRAILER ONSITE.

PRODUCT SPECIFIC PRACTICES

THE FOLLOWING PRODUCT SPECIFIC PRACTICES WILL BE FOLLOWED ONSITE:

PETROLEUM PRODUCTS – ALL ONSITE VEHICLES WILL BE MONITORED FOR LEAKS AND RECEIVE REGULAR PREVENTIVE MAINTENANCE TO REDUCE THE CHANCE OF LEAKAGE. PETROLEUM PRODUCTS WILL BE STORED IN TIGHTLY SEALED CONTAINERS WHICH ARE CLEARLY LABELED. ANY ASPHALT SUBSTANCES USED ONSITE WILL BE APPLIED ACCORDING TO THE MANUFACTURER'S RECOMMENDATIONS.

FUEL STORAGE TANKS SHALL BE LOCATED AWAY FROM SURFACE WATERS AND STORM SEWER SYSTEM INLETS. FUEL TANKS SHALL BE STORED IN A DIKED AREA CAPABLE OF HOLDING 150% OF THE TANK CAPACITY.

FERTILIZERS – FERTILIZERS USED WILL BE APPLIED ONLY IN THE MINIMUM AMOUNTS RECOMMENDED BY THE MANUFACTURER. ONCE APPLIED, FERTILIZER WILL BE WORKED INTO THE SOIL TO LIMIT EXPOSURE TO STORM WATER. STORAGE WILL BE IN A COVERED SHED. THE CONTENTS OF ANY PARTIALLY USED BAGS OF FERTILIZER WILL BE TRANSFERRED TO A SEALABLE PLASTIC BIN TO AVOID SPILLS.

PAINTS – ALL CONTAINERS WILL BE TIGHTLY SEALED AND STORED WHEN NOT REQUIRED FOR USE. EXCESS PAINT WILL NOT BE DISCHARGED TO THE STORM SEWER SYSTEM BUT WILL BE PROPERLY DISPOSED OF ACCORDING TO MANUFACTURERS' INSTRUCTIONS OR STATE AND LOCAL REGULATIONS.

CONCRETE TRUCKS – CONCRETE TRUCKS WILL NOT BE ALLOWED TO WASH OUT OR DISCHARGE SURPLUS CONCRETE OR DRUM WASH WATER ON THE SITE.

DUST CONTROL

DUST CONTROL INVOLVES PREVENTING OR REDUCING DUST FROM EXPOSED SOILS OR OTHER SOURCES DURING LAND DISTURBING, DEMOLITION AND CONSTRUCTION ACTIVITIES TO REDUCE THE PRESENCE OF AIRBORNE SUBSTANCES WHICH MAY PRESENT HEALTH HAZARDS, TRAFFIC SAFETY PROBLEMS OR HARM ANIMAL OR PLANT LIFE.

THE FOLLOWING SPECIFICATIONS FOR DUST CONTROL SHALL BE FOLLOWED ONSITE:

1. VEGETATIVE COVER AND/MULCH – APPLY TEMPORARY OR PERMANENT SEEDING AND MULCH TO AREAS THAT WILL REMAIN IDLE FOR OVER 14 DAYS. SAVING EXISTING TREES AND LARGE SHRUBS WILL ALSO REDUCE SOIL AND AIR MOVEMENT ACROSS DISTURBED AREAS. SEE TEMPORARY SEEDING; PERMANENT SEEDING; MULCHING PRACTICES; AND TREE AND NATURAL AREA PROTECTION PRACTICES.
2. WATERING – SPRAY SITE WITH WATER UNTIL THE SURFACE IS WET BEFORE AND DURING GRADING AND REPEAT AS NEEDED, ESPECIALLY ON HAUL ROADS AND OTHER HEAVY TRAFFIC ROUTES. WATERING SHALL BE DONE AT A RATE THAT PREVENTS DUST BUT DOES NOT CAUSE SOIL EROSION. WETTING AGENTS SHALL BE UTILIZED ACCORDING TO MANUFACTURERS INSTRUCTIONS.
3. SPRAY-ON ADHESIVES – APPLY ADHESIVE ACCORDING TO THE FOLLOWING TABLE OR MANUFACTURERS' INSTRUCTIONS.

I CERTIFY UNDER PENALTY OF LAW THAT THIS DOCUMENT AND ALL ATTACHMENTS WERE PREPARED UNDER MY DIRECTION OR SUPERVISION IN ACCORDANCE WITH A SYSTEM DESIGNED TO ASSURE THAT QUALIFIED PERSONNEL PROPERLY GATHERED AND EVALUATED THE INFORMATION SUBMITTED. BASED ON MY INQUIRY OF THE PERSON OR PERSONS WHO MANAGE THE SYSTEM OR THOSE PERSONS DIRECTLY RESPONSIBLE FOR GATHERING THE INFORMATION, THE INFORMATION SUBMITTED IS, TO THE BEST OF MY KNOWLEDGE AND BELIEF, TRUE, ACCURATE AND COMPLETE. I AM AWARE THAT THERE ARE SIGNIFICANT PENALTIES FOR SUBMITTING FALSE INFORMATION, INCLUDING THE POSSIBILITY OF FINE AND IMPRISONMENT FOR KNOWING VIOLATIONS.

_______________________________ ________
SITE SUPERINTENDENT DATE
COMPANY

SHP
LEADING DESIGN

4805 Montgomery Road, Cincinnati, Ohio 45212 — Suite 400, 513-381-2112
236 High Street, Hamilton, Ohio 45011 — 513-863-5441
250 Civic Center Drive, Columbus, Ohio 43215 — Suite 200, 614-223-2124
1675 Broadway, Denver, Colorado 80202 — Suite 1300, 303-209-7866

DEVELOPMENT PLAN
CITY PROJECT NO. ______________

J.C. SOMMER ELEMENTARY SCHOOL
3055 Kingston Ave., Grove City, Ohio 43123

SOUTH-WESTERN CITY SCHOOL DISTRICT
3805 Marlane Drive, Grove City, OH 43123

EROSION CONTROL NOTES

DATE 12/17/13

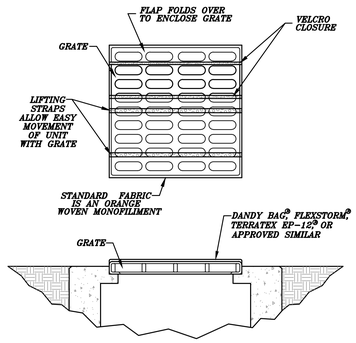

DANDY BAG®*
N.T.S.

INSTALLATION AND MAINTENANCE GUIDELINES

INSTALLATION: THE EMPTY DANDY BAG®* SHOULD BE PLACED OVER THE GRATE AS THE GRATE STANDS ON END. IF USING OPTIONAL OIL ABSORBENTS; PLACE ABSORBENT PILLOW IN POUCH, ON THE BOTTOM (BELOW-GRADE SIDE) OF THE UNIT. ATTACH ABSORBENT PILLOW TO TETHER LOOP. TUCK THE ENCLOSURE FLAP INSIDE TO COMPLETELY ENCLOSE THE GRATE. HOLDING THE LIFTING DEVICES (DO NOT RELY ON LIFTING DEVICES TO SUPPORT THE ENTIRE WEIGHT OF THE GRATE), PLACE THE GRATE INTO ITS FRAME.

MAINTENANCE: REMOVE ALL ACCUMULATED SEDIMENT AND DEBRIS FROM SURFACE AND VICINITY OF UNIT AFTER EACH STORM EVENT. REMOVE SEDIMENT THAT HAS ACCUMULATED WITHIN THE CONTAINMENT AREA OF THE DANDY BAG®* AS NEEDED. IF USING OPTIONAL OIL ABSORBENTS; REMOVE AND REPLACE ABSORBENT PILLOW WHEN NEAR SATURATION.

*FLEXSTORM® TERRATEX EP-12® OR APPROVED EQUAL MAY BE USED IN LIEU OF DANDY BAG®

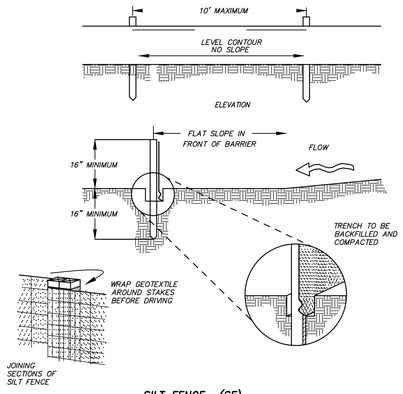

SILT FENCE (SF)
N.T.S.

NOTES:

1. SILT FENCE SHALL BE CONSTRUCTED BEFORE UPSLOPE LAND DISTURBANCE BEGINS.
2. ALL SILT FENCE SHALL BE PLACED AS CLOSE TO THE CONTOUR AS POSSIBLE SO THAT WATER WILL NOT CONCENTRATE AT LOW POINTS IN THE FENCE AND SO THAT SMALL SWALES OR DEPRESSIONS WHICH MAY CARRY SMALL CONCENTRATED FLOWS TO THE SILT FENCE ARE DISSIPATED ALONG ITS LENGTH.
3. ENDS OF THE SILT FENCES SHALL BE BROUGHT UPSLOPE SLIGHTLY SO THAT WATER PONDED BY THE SILT FENCE WILL BE PREVENTED FROM FLOWING AROUND THE ENDS.
4. SILT FENCE SHALL BE PLACED ON THE FLATTEST AREA AVAILABLE.
5. WHERE POSSIBLE, VEGETATION SHALL BE PRESERVED FOR 5 FT. (OR AS MUCH AS POSSIBLE) UPSLOPE FROM THE SILT FENCE. IF VEGETATION IS REMOVED, IT SHALL BE REESTABLISHED WITHIN 7 DAYS FROM THE INSTALLATION OF THE SILT FENCE.
6. THE HEIGHT OF THE SILT FENCE SHALL BE A MINIMUM OF 16 IN. ABOVE THE ORIGINAL GROUND SURFACE.
7. THE SILT FENCE SHALL BE PLACED IN AN EXCAVATED OR SLICED TRENCH CUT A MINIMUM OF 6 IN. DEEP. THE TRENCH SHALL BE CUT WITH A TRENCHER, CABLE LAYING MACHINE, OR OTHER SUITABLE DEVICE WHICH WILL ENSURE AN ADEQUATELY UNIFORM TRENCH DEPTH.
8. THE SILT FENCE SHALL BE PLACED WITH THE STAKES ON THE DOWNSLOPE SIDE OF THE GEOTEXTILE. A MINIMUM OF 8 IN. OF GEOTEXTILE MUST BE BELOW THE GROUND SURFACE. EXCESS MATERIAL SHALL LAY ON THE BOTTOM OF THE 6-IN.-DEEP TRENCH. THE TRENCH SHALL BE BACKFILLED AND COMPACTED ON BOTH SIDES OF THE FABRIC.
9. SEAMS BETWEEN SECTION OF SILT FENCE SHALL BE SPLICED TOGETHER ONLY AT A SUPPORT POST WITH A MINIMUM 6 IN. OVERLAP PRIOR TO DRIVING INTO THE GROUND, (SEE DETAIL).
10. MAINTENANCE--SILT FENCE SHALL ALLOW RUNOFF TO PASS ONLY AS DIFFUSE FLOW THROUGH THE GEOTEXTILE. IF RUNOFF OVERTOPS THE SILT FENCE, FLOWS UNDER THE FABRIC OR AROUND THE FENCE ENDS, OR IN ANY OTHER WAY BECOMES A CONCENTRATED FLOW DISCHARGE, ONE OF THE FOLLOWING SHALL BE PERFORMED, AS APPROPRIATE: 1) THE LAYOUT OF THE SILT FENCE SHALL BE CHANGED, 2) ACCUMULATED SEDIMENT SHALL BE REMOVED, OR 3) OTHER PRACTICES SHALL BE INSTALLED.

CRITERIA FOR SILT FENCE MATERIALS

1. FENCE POSTS--THE LENGTH SHALL BE A MINIMUM OF 32 IN. LONG. WOOD POSTS WILL BE 2-BY-2-IN. NOMINAL DIMENSIONED HARDWOOD OF SOUND QUALITY. THEY SHOULD BE FREE OF KNOTS, SPLITS, AND OTHER VISIBLE IMPERFECTIONS, THAT WILL WEAKEN THE POSTS. THE MAXIMUM SPACING BETWEEN POSTS SHALL BE 10 FT. POSTS SHALL BE DRIVEN A MINIMUM OF 16 IN. INTO THE GROUND, WHERE POSSIBLE. IF NOT POSSIBLE, THE POSTS SHALL BE ADEQUATELY SECURED TO PREVENT OVERTURNING OF THE FENCE DUE TO SEDIMENT/WATER LOADING.
2. SILT FENCE FABRIC SHALL BE ODOT TYPE C GEOTEXTILE FABRIC OR AS DESCRIBED IN THE CHART BELOW:

FABRIC PROPERTIES AND TESTING METHOD

MINIMUM TENSILE STRENGTH	120 LBS, ASTM D 4632
MAXIMUM ELONGATION AT 60 LBS	50%, ASTM D 4632
MINIMUM PUNCTURE STRENGTH	50 LBS, ASTM D 4833
MINIMUM TEAR STRENGTH	40 LBS, ASTM D 4533
APPARENT OPENING SIZE	≤ 0.84MM, ASTM D 4751
MINIMUM PERMITTIVITY	.1X10⁻² SEC⁻¹, ASTM D 4491
ULTRAVIOLET EXPOSURE STRENGTH RETENTION	70%, ASTM G 4355

* STRAW WATTLES MAY BE USED INSTEAD OF SILT FENCE.

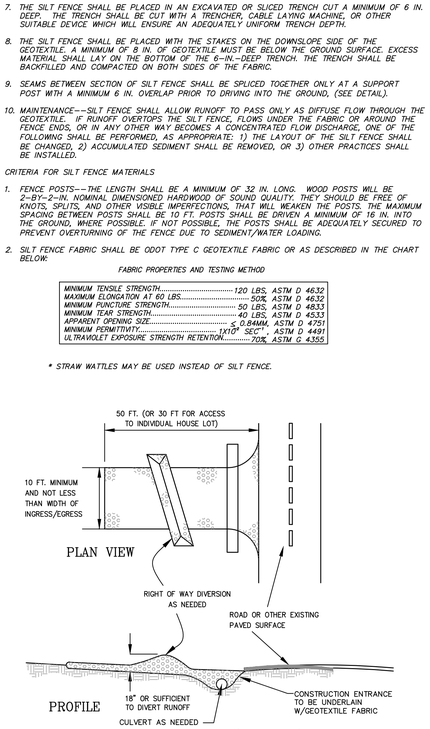

NOTES: 1). ALL P.V.C. PIPES ARE TO BE 4" I.D. SCHEDULE 40

2). ALL JOINTS OF THE FLOATATION SECTION SHALL BE GLUED TOGETHER AND WATER-TIGHT. JOINTS OF SKIMMER SECTION NEED NOT TO BE WATER-TIGHT.

3). 4" HDPE FLEXIBLE DRAIN PIPE IS TO BE ATTACHED TO THE OUTLET STRUCTURE WITH WATER-TIGHT CONNECTIONS. FOR CORRUGATED METAL RISER, STUB SHALL BE SCHEDULE 40 STEEL PIPE TACK WELDED TO CREATE A WATER-TIGHT SEAL. FOR CONCRETE RISER, STUB SHALL BE SCHEDULE 40 P.V.C. PIPE GROUTED TO CREATE A WATER-TIGHT SEAL.

4.) ORIFICE IS TO BE SIZED FOR A MINIMUM 48-HOUR DEWATERING TIME.

TEMPORARY SEDIMENT BASIN 001 DEWATERING VOLUME
1800 CF PER ACRE OF TOTAL DISTURBED AREA
1800 CF/AC * 8.63 AC = 15,534 CF
1.50" ORIFICE ELEVATION = 824.00
TOP OF BASIN ELEVATION = 826.00
VOLUME PROVIDED = 15,680 CF
DRAWDOWN TIME = 4.59 DAYS

TEMPORARY SEDIMENT BASIN 001 SEDIMENT VOLUME
1000 CF PER ACRE OF TOTAL DISTURBED AREA
1000 CF/AC * 8.63 AC = 8,360 CF
1.50" ORIFICE ELEVATION = 824.00
BOTTOM OF BASIN ELEVATION = 822.00
VOLUME PROVIDED = 13,065 CF

SKIMMER DEWATERING DEVICE
N.T.S.

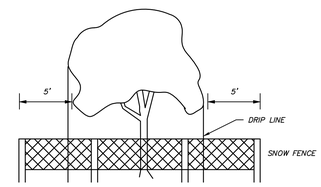

PROTECT EXISTING TREES AND OTHER VEGETATION INDICATED TO REMAIN IN PLACE AGAINST UNNECESSARY CUTTING, BREAKING OR SKINNING OF ROOTS, SKINNING OR BRUISING OF BARK, SMOTHERING OF TREES BY STOCKPILING CONSTRUCTION MATERIALS OR EXCAVATED MATERIALS WITHIN DRIP LINE, EXCESS FOOT OR VEHICULAR TRAFFIC, OR PARKING OF VEHICLES WITHIN DRIP LINE. PROVIDE TEMPORARY GUARDS TO PROTECT TREES AND AND VEGETATION TO BE LEFT STANDING.

PROTECTION OF EXISTING TREES AND VEGETATION
N.T.S.

NOTES:

1. SIGNAGE SHALL CLEARLY IDENTIFY THE TREE AND NATURAL PRESERVATION AREA AND STATE THAT NO CLEARING OR EQUIPMENT IS ALLOWED WITHIN IT.
2. TREE AND NATURAL PRESERVATION AREA SHALL BE FENCED PRIOR TO BEGINNING CLEARING OPERATIONS.
3. FENCE MATERIALS SHALL BE METAL FENCE POSTS WITH SNOW FENCE.
4. FENCE SHALL BE PLACED AS SHOWN ON PLANS AND BEYOND THE DRIP LINE OR CANOPY OF TREES TO BE PROTECTED.
5. IF ANY CLEARING IS DONE AROUND SPECIMEN TREES IT SHALL BE DONE BY CUTTING AT GROUND LEVEL WITH HAND HELD TOOLS AND SHALL NOT BE GRUBBED OR PULLED OUT. NO CLEARING SHALL BE DONE IN BUFFER STRIPS OR OTHER PRESERVED FORESTED AREAS.
6. NO FILLING OR STOCKPILING OF MATERIALS SHALL OCCUR WITHIN THE TREE PROTECTION AREA, INCLUDING DEPOSITION OF SEDIMENT.
7. WHERE UTILITIES MUST RUN THROUGH A TREE'S DRIP LINE, TUNNELING SHOULD BE USED TO MINIMIZE ROOT DAMAGE. TUNNELING SHOULD BE AT A MINIMUM DEPTH OF 24 INCHES FOR TREES LESS THAN 12 INCHES IN DIAMETER OR AT A MINIMUM DEPTH OF 36 INCHES FOR LARGER DIAMETER TREES.
8. WHERE TUNNELING WILL BE PERFORMED WITHIN THE DRIP LINE OF A TREE, THE TUNNEL SHOULD BE PLACED A MINIMUM OF 2 FEET AWAY FROM THE TREE TRUNK TO AVOID TAPROOTS.
9. MINIMIZE EXCAVATION OR TRENCHING WITHIN THE DRIP LINE OF THE TREE. ROUTE TRENCHES AROUND THE DRIP LINE OF TREES.
10. ROOTS 2 INCHES OR LARGER THAT ARE SEVERED BY TRENCHING SHOULD BE SAWN OFF NEATLY IN ORDER TO ENCOURAGE NEW GROWTH AND DISCOURAGE DECAY.
11. SOIL EXCAVATED DURING TRENCHING SHALL BE PILED ON THE SIDE AWAY FROM THE TREE.
12. ROOTS SHALL BE KEPT MOIST WHILE TRENCHES ARE OPEN AND REFILLED IMMEDIATELY AFTER UTILITIES ARE INSTALLED OR REPAIRED.
13. ARBORIST TO DELINEATE DRIP LINE OF TREES TO REMAIN, TO PROTECT WITH FENCING. DO NOT ALLOW WATER PONDING WITHIN DRIP LINE.

CONSTRUCTION ENTRANCE (SCD 2230)

1. STONE SIZED--TWO-INCH STONE SHALL BE USED, OR RECYCLED CONCRETE EQUIVALENT.

2. LENGTH--THE CONSTRUCTION ENTRANCE SHALL BE AS LONG AS REQUIRED TO STABILIZE HIGH TRAFFIC AREA BUT NOT LESS THAN 50 FT. (EXCEPT ON SINGLE RESIDENCE LOT WHERE A 30-FT. MINIMUM LENGTH APPLIES).

3. THICKNESS--THE STONE LAYER SHALL BE BE AT LEAST 6 IN. THICK.

4. WIDTH--THE ENTRANCE SHALL BE AT LEAST 10 FT. WIDE, BUT NOT LESS THAN THE FULL WIDTH AT POINTS WHERE INGRESS OR EGRESS OCCURS.

5. BEDDING--A GEOTEXTILE SHALL BE PLACED OVER THE ENTIRE AREA PRIOR TO PLACING THE STONE. IT SHALL HAVE A GRAB TENSILE STRENGTH OF AT LEAST 200 LB. AND A MULLEN BURST STRENGTH OF AT LEAST 190 LB.

6. CULVERT--A PIPE OR CULVERT SHALL BE CONSTRUCTED UNDER THE ENTRANCE IF NEEDED TO PREVENT SURFACE WATER FLOWING ACROSS THE ENTRANCE FROM BEING DIRECTED OUT ONTO PAVED SURFACES.

7. WATER BAR--A WATER BAR SHALL BE CONSTRUCTED AS PART OF THE CONSTRUCTION ENTRANCE IF NEEDED TO PREVENT SURFACE RUNOFF FROM FLOWING THE LENGTH OF THE CONSTRUCTION ENTRANCE AND OUT ONTO PAVED SURFACES.

8. MAINTENANCE--TOP DRESSING OF ADDITIONAL STONE SHALL BE APPLIED AS CONDITIONS DEMAND. MUD SPILLED, DROPPED, WASHED OR TRACKED ONTO PUBLIC ROADS, OR ANY SURFACE WHERE RUNOFF IS NOT CHECKED BY SEDIMENT CONTROLS, SHALL BE REMOVED IMMEDIATELY. REMOVAL SHALL BE ACCOMPLISHED BY SCRAPING OR SWEEPING.

9. CONSTRUCTION ENTRANCES SHALL NOT BE RELIED UPON TO REMOVE MUD FROM VEHICLES AND PREVENT OFF-SITE TRACKING. VEHICLES THAT ENTER AND LEAVE THE CONSTRUCTION-SITE SHALL BE RESTRICTED FROM MUDDY AREAS.

10. CONSTRUCTION ENTRANCE SIGN--A "CONSTRUCTION ENTRANCE AHEAD" SIGN WILL BE NEEDED FOR EACH DIRECTION, PRIOR TO THE ENTRANCE.

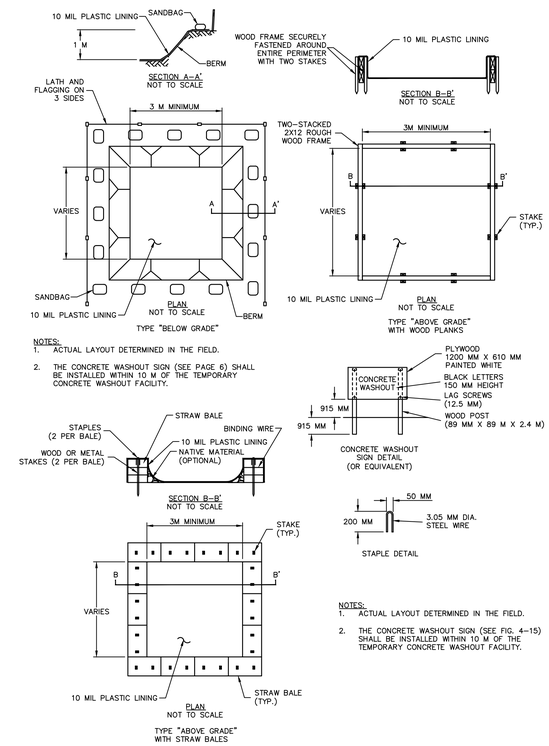

NOTES:
1. ACTUAL LAYOUT DETERMINED IN THE FIELD.
2. THE CONCRETE WASHOUT SIGN (SEE PAGE 6) SHALL BE INSTALLED WITHIN 10 M OF THE TEMPORARY CONCRETE WASHOUT FACILITY.

NOTES:
1. ACTUAL LAYOUT DETERMINED IN THE FIELD.
2. THE CONCRETE WASHOUT SIGN (SEE FIG. 4-15) SHALL BE INSTALLED WITHIN 10 M OF THE TEMPORARY CONCRETE WASHOUT FACILITY.

CONCRETE WASHOUT DETAIL
N.T.S.

SHP LEADING DESIGN

4805 Montgomery Road, Suite 400, Cincinnati, Ohio 45212, 513-381-2112
236 High Street, Hamilton, Ohio 45011, 513-863-5441
250 Civic Center Drive, Suite 200, Columbus, Ohio 43215, 614-223-2124
1675 Broadway, Suite 1300, Denver, Colorado 80202, 303-209-7866

DEVELOPMENT PLAN
CITY PROJECT NO. _____

J.C. SOMMER ELEMENTARY SCHOOL
3055 Kingston Ave., Grove City, Ohio 43123

SOUTH-WESTERN CITY SCHOOL DISTRICT
3805 Marlane Drive, Grove City, OH 43123

EROSION CONTROL DETAILS

DATE 12/17/13

C113

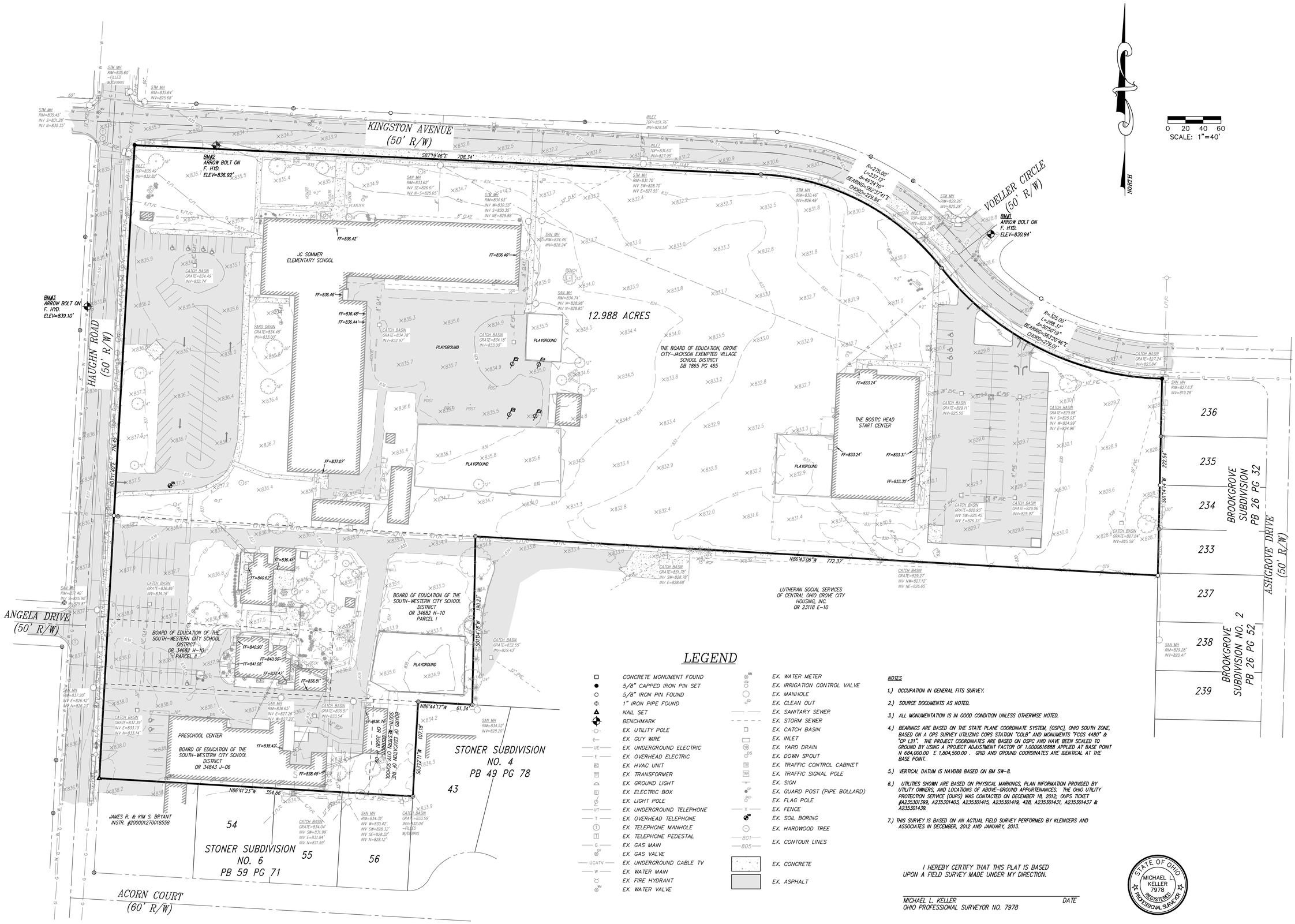

LEGEND

- CONCRETE MONUMENT FOUND
- 5/8" CAPPED IRON PIN SET
- 5/8" IRON PIN FOUND
- 1" IRON PIPE FOUND
- NAIL SET
- BENCHMARK
- EX. UTILITY POLE
- EX. GUY WIRE
- EX. UNDERGROUND ELECTRIC
- EX. OVERHEAD ELECTRIC
- EX. HVAC UNIT
- EX. TRANSFORMER
- EX. GROUND LIGHT
- EX. ELECTRIC BOX
- EX. LIGHT POLE
- EX. UNDERGROUND TELEPHONE
- EX. OVERHEAD TELEPHONE
- EX. TELEPHONE MANHOLE
- EX. TELEPHONE PEDESTAL
- EX. GAS MAIN
- EX. GAS VALVE
- EX. UNDERGROUND CABLE TV
- EX. WATER MAIN
- EX. FIRE HYDRANT
- EX. WATER VALVE
- EX. WATER METER
- EX. IRRIGATION CONTROL VALVE
- EX. MANHOLE
- EX. CLEAN OUT
- EX. SANITARY SEWER
- EX. STORM SEWER
- EX. CATCH BASIN
- EX. INLET
- EX. YARD DRAIN
- EX. DOWN SPOUT
- EX. TRAFFIC CONTROL CABINET
- EX. TRAFFIC SIGNAL POLE
- EX. SIGN
- EX. GUARD POST (PIPE BOLLARD)
- EX. FLAG POLE
- EX. FENCE
- EX. SOIL BORING
- EX. HARDWOOD TREE
- EX. CONTOUR LINES
- EX. CONCRETE
- EX. ASPHALT

NOTES

1.) OCCUPATION IN GENERAL FITS SURVEY.

2.) SOURCE DOCUMENTS AS NOTED.

3.) ALL MONUMENTATION IS IN GOOD CONDITION UNLESS OTHERWISE NOTED.

4.) BEARINGS ARE BASED ON THE STATE PLANE COORDINATE SYSTEM, (OSPC), OHIO SOUTH ZONE, BASED ON A GPS SURVEY UTILIZING CORS STATION "COLB" AND MONUMENTS "FCGS 4480" & "CP L21". THE PROJECT COORDINATES ARE BASED ON OSPC AND HAVE BEEN SCALED TO GROUND BY USING A PROJECT ADJUSTMENT FACTOR OF 1.0000616888 APPLIED AT BASE POINT N 684,000.00 E 1,804,500.00 . GRID AND GROUND COORDINATES ARE IDENTICAL AT THE BASE POINT.

5.) VERTICAL DATUM IS NAVD88 BASED ON BM SW-8.

6.) UTILITIES SHOWN ARE BASED ON PHYSICAL MARKINGS, PLAN INFORMATION PROVIDED BY UTILITY OWNERS, AND LOCATIONS OF ABOVE-GROUND APPURTENANCES. THE OHIO UTILITY PROTECTION SERVICE (OUPS) WAS CONTACTED ON DECEMBER 18, 2012; OUPS TICKET #A235301399, A235301403, A235301415, A235301419, 428, A235301431, A235301437 & A235301439.

7.) THIS SURVEY IS BASED ON AN ACTUAL FIELD SURVEY PERFORMED BY KLEINGERS AND ASSOCIATES IN DECEMBER, 2012 AND JANUARY, 2013.

I HEREBY CERTIFY THAT THIS PLAT IS BASED UPON A FIELD SURVEY MADE UNDER MY DIRECTION.

MICHAEL L. KELLER DATE
OHIO PROFESSIONAL SURVEYOR NO. 7978

STATE OF OHIO
MICHAEL L. KELLER
7978
REGISTERED
PROFESSIONAL SURVEYOR

SHP LEADING DESIGN

4805 Montgomery Road, Cincinnati, Ohio 45212 — Suite 400, 513-381-2112
236 High Street, Hamilton, Ohio 45011 — 513-863-5441
250 Civic Center Drive, Columbus, Ohio 43215 — Suite 200, 614-223-2124
1675 Broadway, Denver, Colorado 80202 — Suite 1300, 303-209-7866

City Administrator _____
Service Director _____
Review for the City of Grove City _____
Jackson Township Fire Department _____

DEVELOPMENT PLAN
CITY PROJECT NO. _____

J.C. SOMMER ELEMENTARY SCHOOL

3055 Kingston Ave., Grove City, Ohio 43123

SOUTH-WESTERN CITY SCHOOL DISTRICT

3805 Marlane Drive, Grove City, OH 43123

SITE SURVEY

DATE 12/17/13

C114