1 A1 FRONT VIEW

2 A1 REAR VIEW

RECEIVED
AUG 03 2015
GC PLANNING COMMISSION

r e d
architecture · planning
855 grandview ave.
suite 295
columbus, ohio 43215
tel: 614.487.8770
fax: 614.487.8777

4145 BUCKEYE PARKWAY - TENANT SPACE
SCHEMATIC DESIGN
GROVE CITY, OH 43123

A1
August 03, 2015

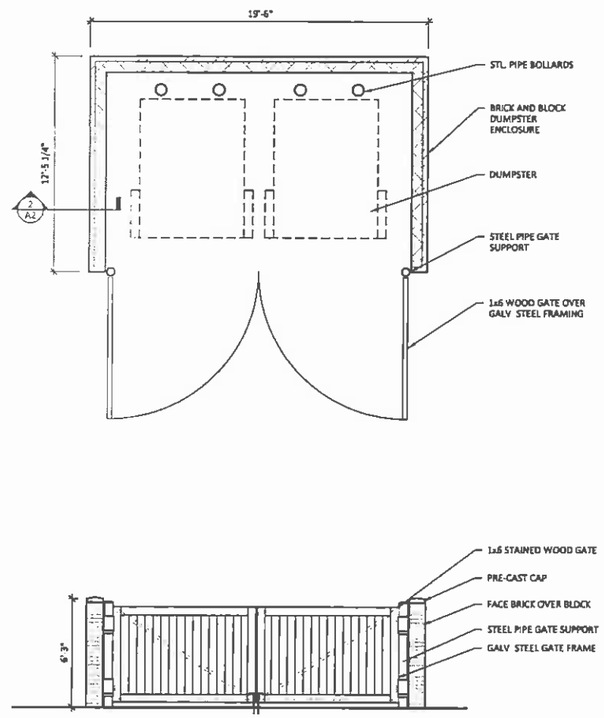

1 A2 DUMPSTER PLAN AND ELEVATION
1/4" = 1'-0"

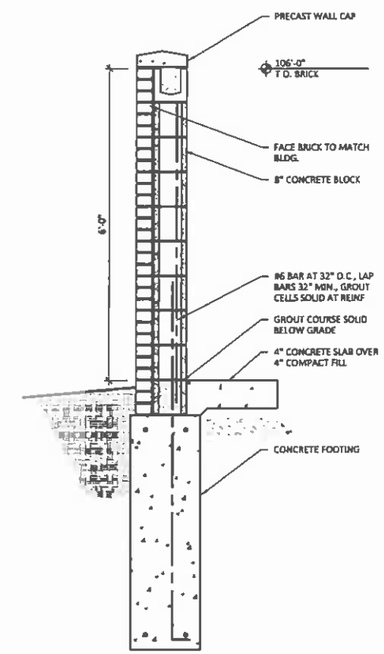

2 A2 DUMPSTER WALL SECTION
3/4" = 1'-0"

LUMINAIRE SCHEDULE

TYPE	DESCRIPTION	MANUFACTURER	MODEL	HOUSING / MOUNTING	LAMP TYPE	BALLAST / DRIVER	COMMENTS	VOLTS	INPUT WATTS
S1	SITE LIGHT	BEACON	MRDS-26-60NB-126-5K-T3-UNV-3RNW-BBT	POLE	LED ENGINE	N/A	-	120	136
P1	SITE LIGHT POLE	VAULMONT	300A300	POLE	-	N/A	-	-	-

LUMINAIRE CALCULATIONS

LABEL	CALC TYPE	UNITS	Average	Max.	Min.	Avg/Min	Max/Min.
CalcPts	ILLUMINANCE	Fc	1.56	2.5	0.3	5.2	8.33

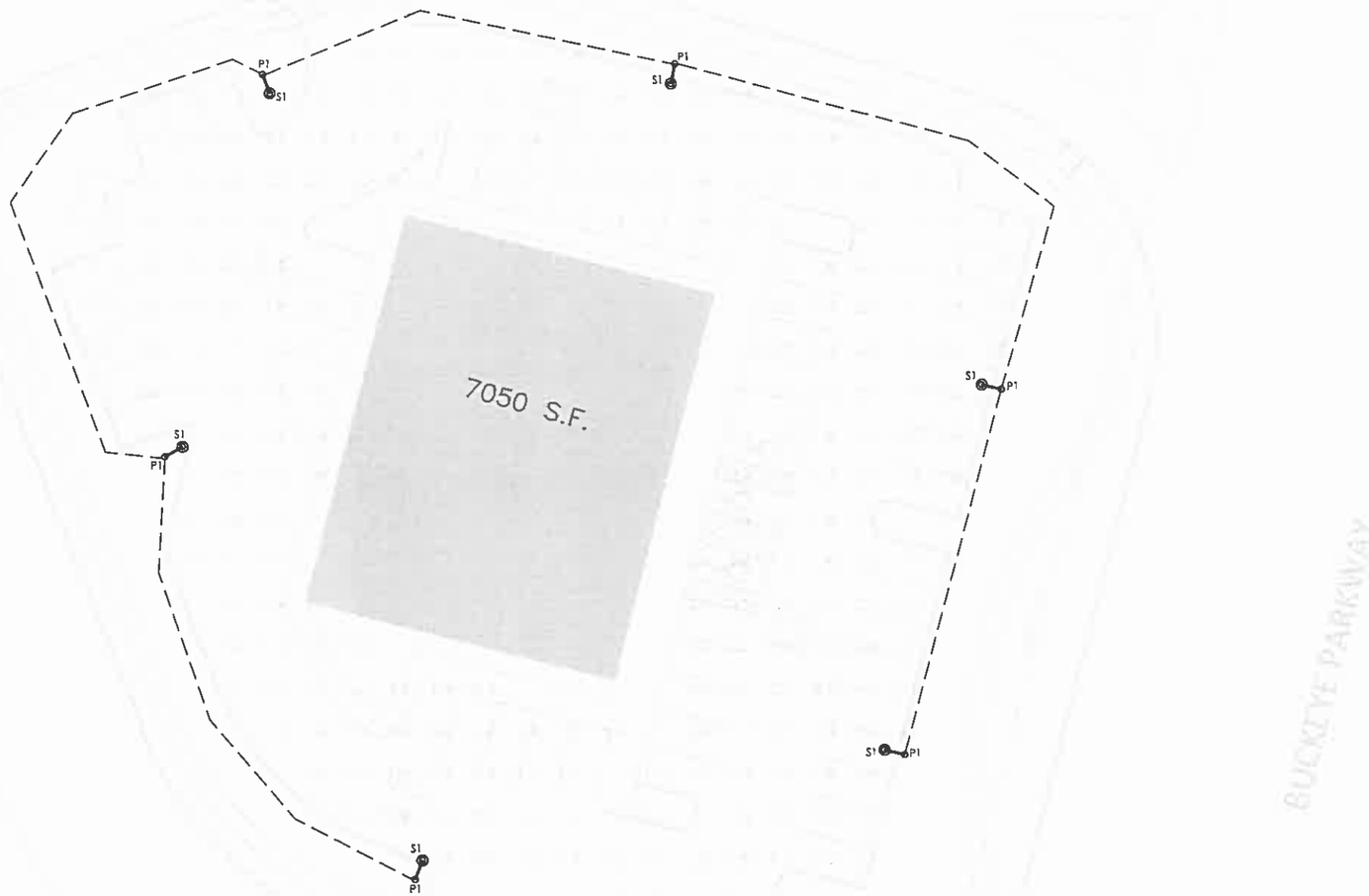

1 SITE PLAN - ELECTRICAL
1/16" = 1'-0"

CALCULATIONS PROVIDED BY MANUFACTURES LIGHTING REP

red
architecture + planning
855 grandview ave.
suite 235
columbus, ohio 43215
tel: 614.487.8770
fax: 614.487.8777

MARK HEADLEE
LICENSE #10425 EXPIRES 12.31.15

COPYRIGHT 2015 ALL DRAWINGS AND SPECIFICATIONS SHALL REMAIN THE PROPERTY OF RED ARCHITECTURE + PLANNING LLC AND MAY NOT BE USED, DUPLICATED OR ALTERED WITHOUT THE WRITTEN CONSENT OF THE ARCHITECT.

NEW MULTI-TENANT SPACE
4145 BUCKEYE PARKWAY
GROVE CITY, OH 43123

PROJECT NUMBER
LIN001

ISSUE	DATE
SITE DEVELOPMENT	AUG 03, 2015

SITE PLAN
ELECTRICAL

SHEET:
ES-1

7/15/2015 9:11 AM