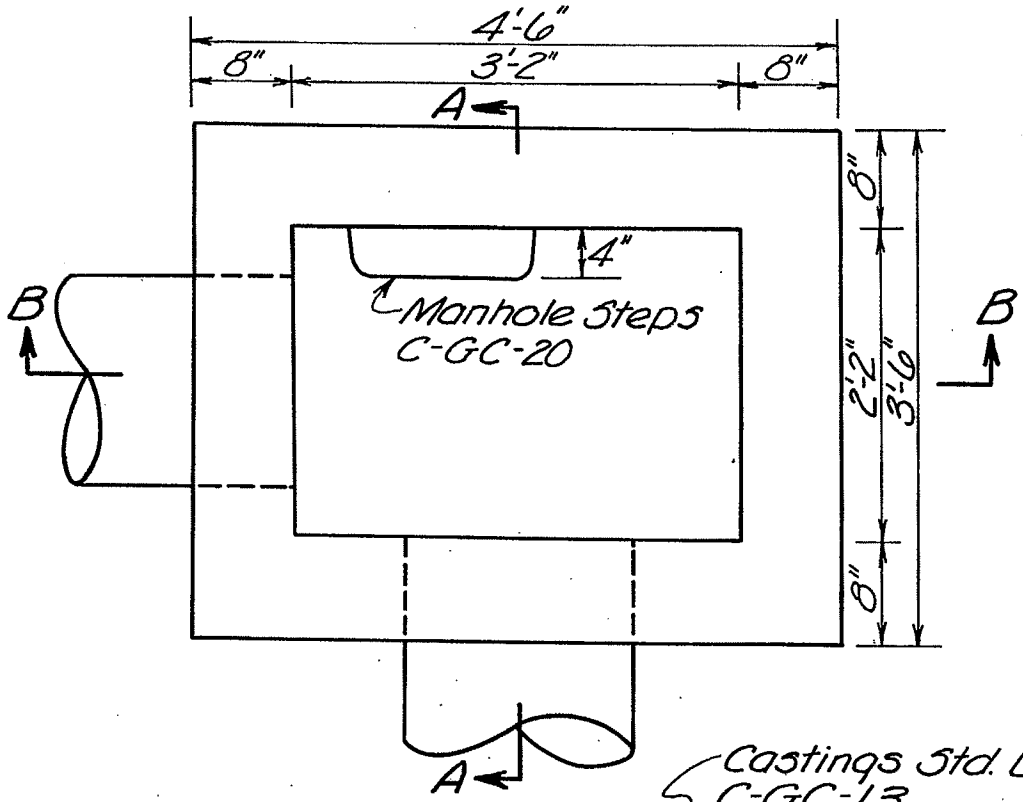

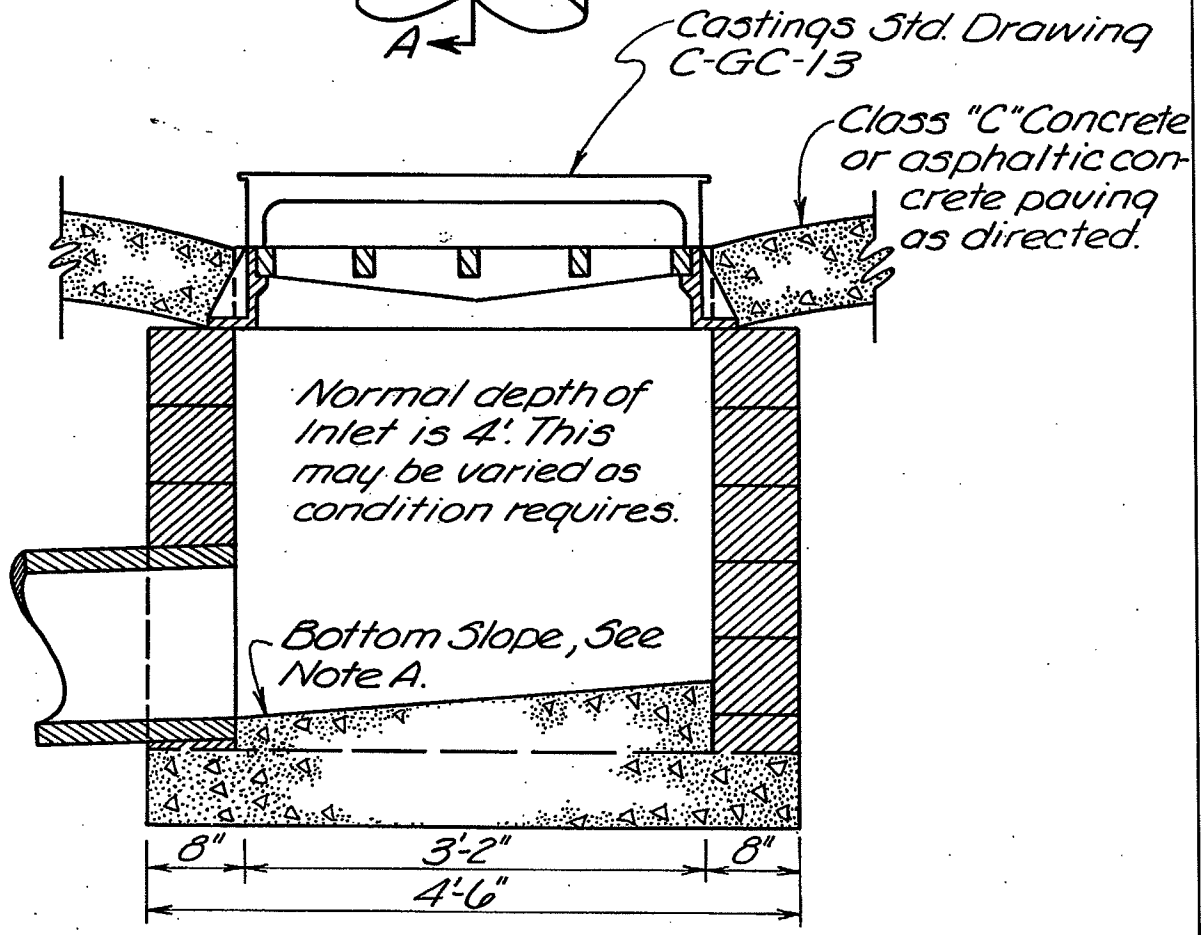

1/2

Approved 23 Dec 72
Date

City Engineer

CURB & GUTTER INLET

City of Grove City
Ohio

Standard
Construction Drawing

Rev.

C-GC-9

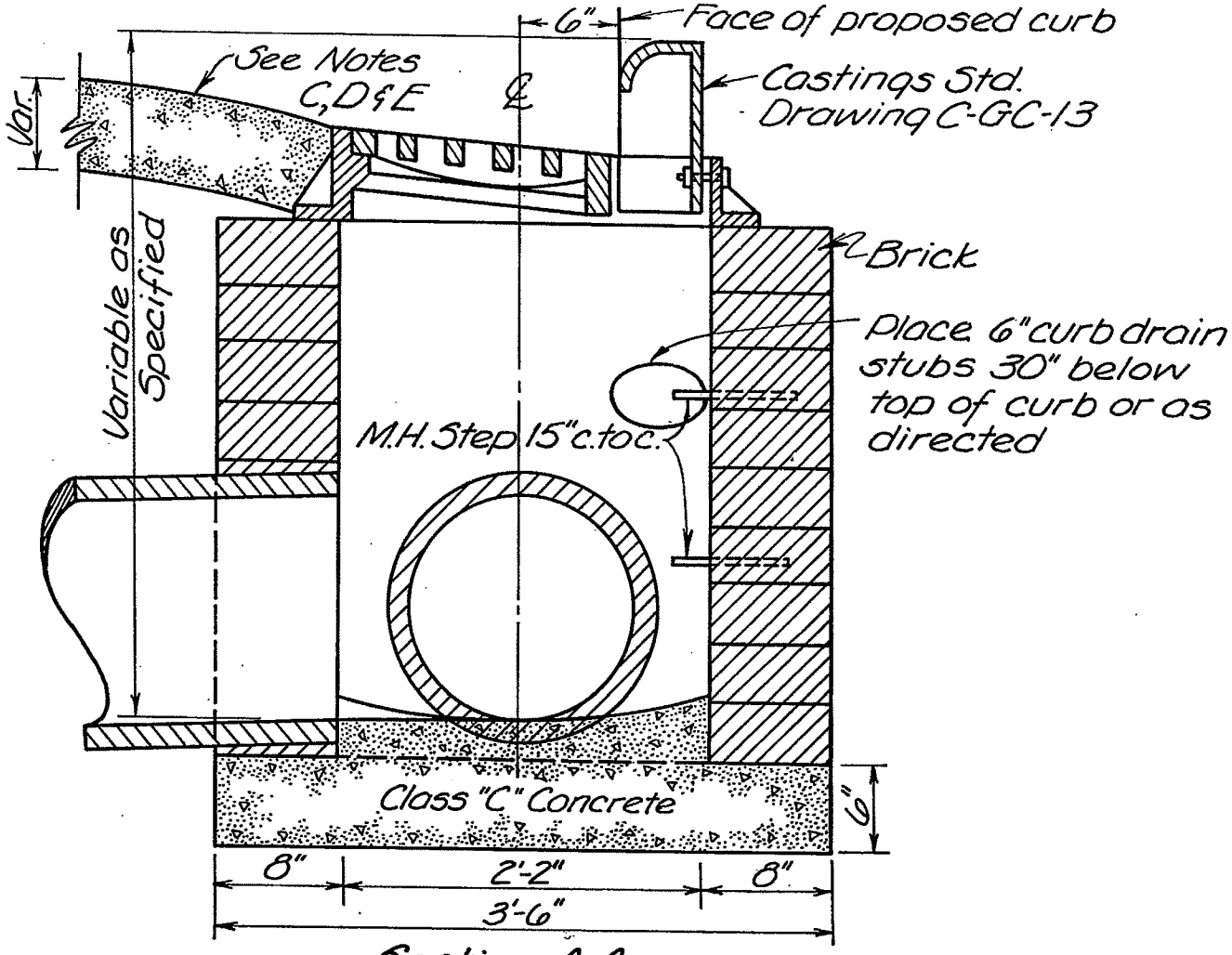

Section A-A

Note A: The inlet bottom shall be shaped to provide slope of 3" to 4" to outlet pipe. The cross sectional form of bottom and longitudinal slope is to be adapted to location of outlet pipe as directed.

Note B: Outlet pipe may be located in end corners or side wall. In either case the outlet pipe shall be directed towards the center of the inlet.

Note C: The existing gutter within an area approximately 4' outside inlet opening or as otherwise ordered shall be cut out so that repaving may be shaped to meet the depressed lip of the inlet opening as directed.

Note D: The existing gutter, where cut out for depression, shall be replaced with Class "C" Concrete or asphaltic concrete paving as directed.

Note E: The backfilling within proposed paved areas shall be well tamped in layers not exceeding 4" in thickness loose measurement, or backfilled with an approved material.

2/2

Approved 23 Dec 72 Date City Engineer	CURB & GUTTER INLET	City of Grove City Ohio Standard Construction Drawing Rev. C-GC-9