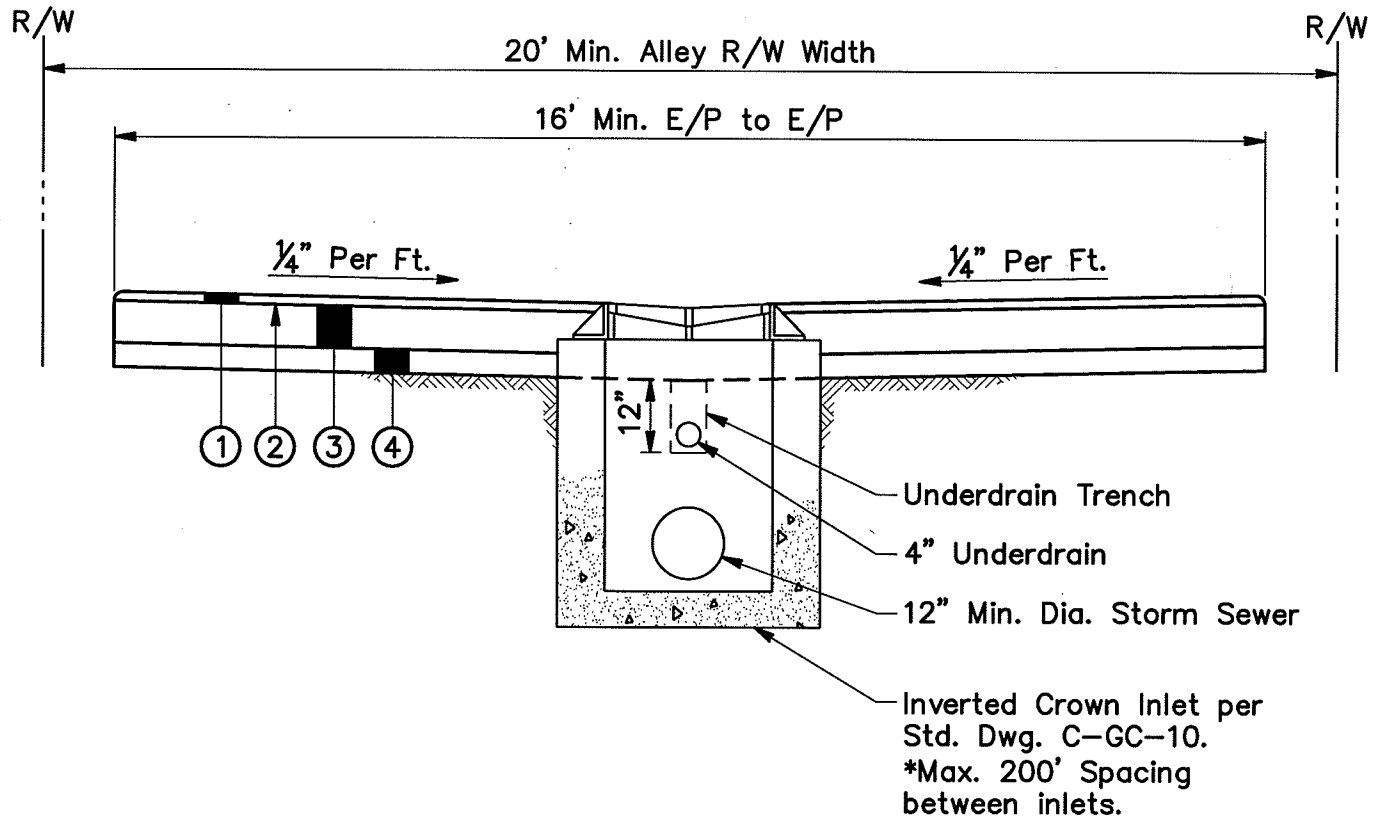

1. 1 ½" Asphalt Concrete, Surface Course, Item 448 Type I, PG. 64-22.
2. Bituminous Tack Coat, Item 407.
3. 7" ODOT Item 305 Portland Cement Concrete Base.
4. 4" No. 57 Aggregate.

NOTES:

1. 15' Max. spacing between transverse contraction joints, 3" Min. Depth.
2. No centerline contraction or construction joints.
3. 4' Wide Asphalt Pressure Relief Joints on each end of alley.
4. 4' Wide Asphalt Pressure Relief Joints shall also be installed at intervals not to exceed 400' along length of alley per C-GC-59.

	STANDARD ALLEY PAVEMENT SECTION	CITY OF GROVE CITY, OHIO		
		STANDARD CONSTRUCTION DRAWING		
		Effective Date 3-30-06	Revision Date	Drawing Number C-GC-91