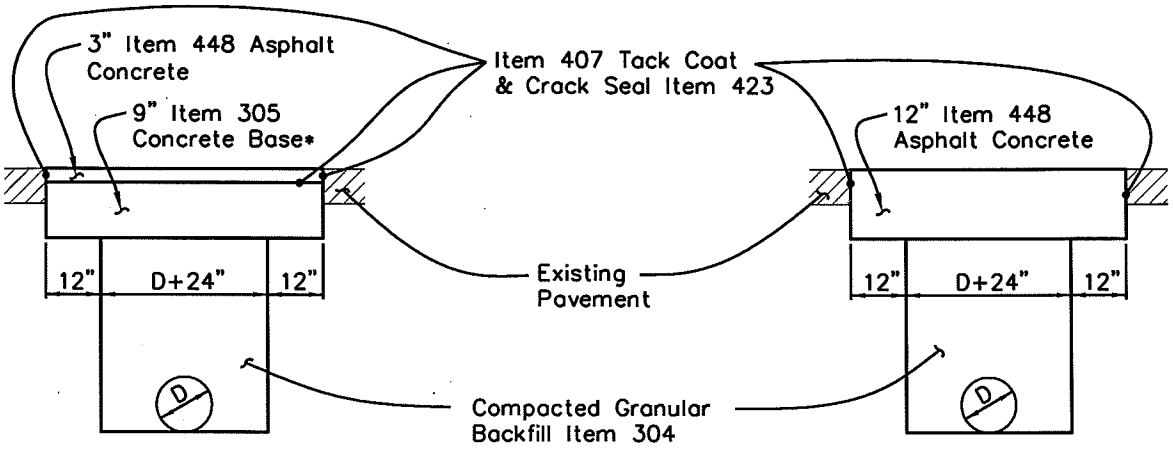


TYPE IA – RIGID BASE

TYPE IB – FLEXIBLE (NO BASE)

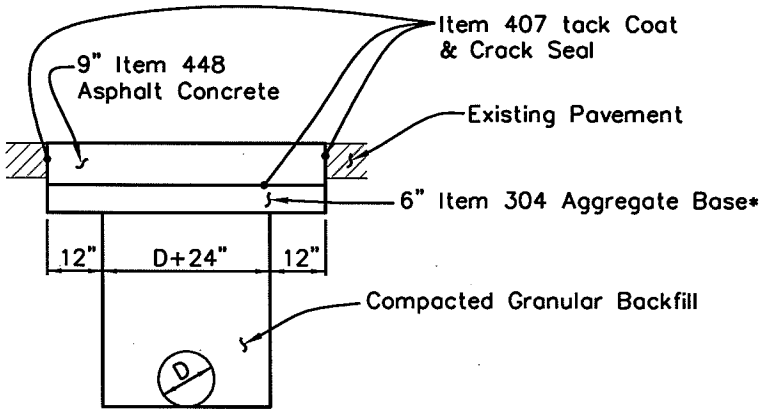


TYPE IC – FLEXIBLE (NO BASE)

*Type IC–Flexible, Item 304: aggregate base shall be eliminated when controlled density fill is used for compacted backfill.

SEE SHEET 2 FOR NOTES



| | | |
|---|---|---|
| PAVEMENT REPLACEMENT (ARTERIAL) | CITY OF GROVE CITY, OHIO | |
| | STANDARD CONSTRUCTION DRAWING | |
| | Effective Date 5-12-05 | Revision Date 11-15-05 | Dwg. No. C-GC-66 |

## NOTES

1. Backfill of all trenches shall be compacted granular (No. 304 or No. 4 crushed limestone) backfill as per Item 912. Item 310 or 310 modified or recycled material shall not be used.

2. Permanent repavement shall not be done immediately after completing backfill.. The edge shall be cut vertically and trimmed behind all broken pavement to provide a single straight line. Temporary pavement shall be installed when permanent pavement cannot be immediately replaced.

3. Alternate backfill Item 636 – controlled density fill with a minimum density of 125 lbs./cu. ft. consisting of a cementitious material. Use type 1 or 2 spec only, type 3 & 4 not permitted.

4. Asphalt concrete, item 448 type 2, placement not to exceed 3", compacted, per course. 301 – 6" Max. lift 448 type 1 – 2" Max. lift.

5. Tack coat, item 407 bituminous material, SS–1, applied at a rate of 0.1 gal. per sq. yd. and cover consisting of crushed gravel or limestone, size no. 9.

6. Existing pavements less than 3 feet in width remaining adjacent to curb after excavation shall be removed and replaced.

7. For all sanitary sewers the bedding extends from 6" below the bottom and 12" above the top of the pipe shall be filled with a material meeting the following gradation: No. 57 limestone or No. 8 limestone with the balance of the trench being compacted granular (No. 304) backfill use No. 4 limestone for all trench depths greater than 6'.

8. Item numbers shown refer to the current State of Ohio Department of Transportation "Construction and Material Specifications" (ODOTCMS) and the current City of Columbus "Construction and Material Specifications" (CMSC) item numbers. The greater requirement shall take precedence unless waived by the City Engineer (submittal required).

9. Also included in pay Item is the replacement of traffic pavement markings with 644 Thermoplastic.

10. Warranty: All pavement repairs shall be guaranteed for one year to refill settled areas,seal joints, or remove and repair any defect as directed by the City Engineer.



| | | | | |
|---|---|---|---|---|
| | PAVEMENT REPLACEMENT (ARTERIAL) | CITY OF GROVE CITY, OHIO | | |
| | | STANDARD CONSTRUCTION DRAWING | | |
| | | Effective Date 5–12–05 | Revision Date 11–15–05 | Dwg. No. C–GC–66 |