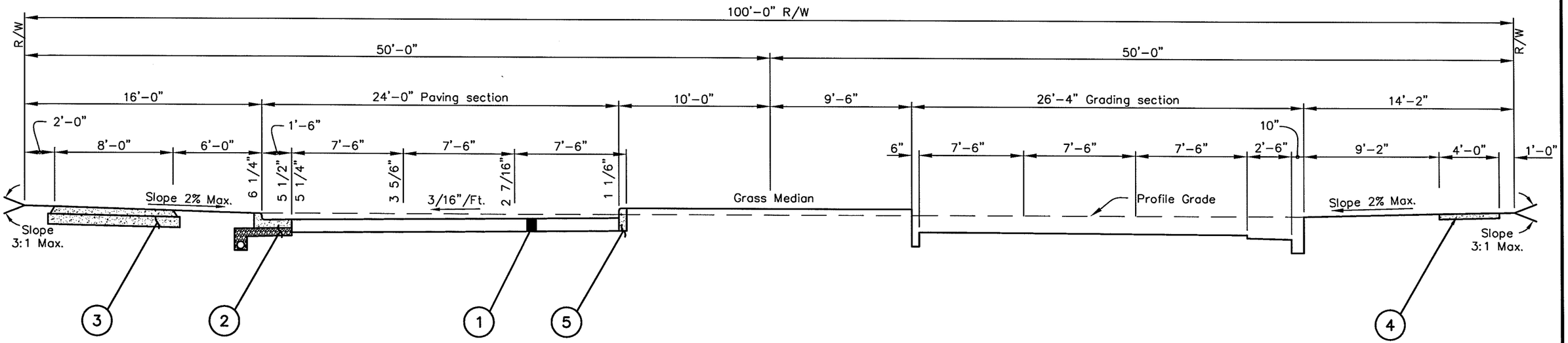

1. Refer to Standard Drawing C-GC-90 for Pavement Design Specifications
2. City of Grove City Standard Concrete Combined Curb & Gutter. See STD. DWG C-GC-57A.
3. City of Grove City Standard Bike Path. See STD. DWG. C-GC-80.
4. City of Grove City Standard Sidewalk. See Std. Dwg. C-GC-46.
5. City of Grove City Standard Straight 18" Concrete Curb. See STD. DWG. C-GC-58.

PRIMARY ARTERIAL STREET 68' SECTION WITH CONCRETE CURB/COMBINED CURB & GUTTER	CITY OF GROVE CITY, OHIO		
	STANDARD CONSTRUCTION DRAWING		
	Rev. 11-15-05	Date 6-02-02	Dwg. No. C-GC-64