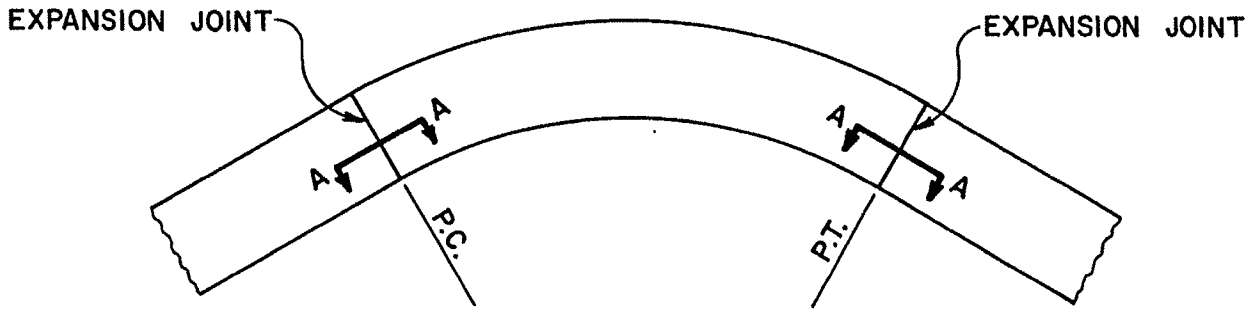

EXPANSION JOINT DETAIL FOR PAVEMENT SECTIONS WITH ℄ RADII TO 500' & DELTAS (Δ) GREATER THAN 50°

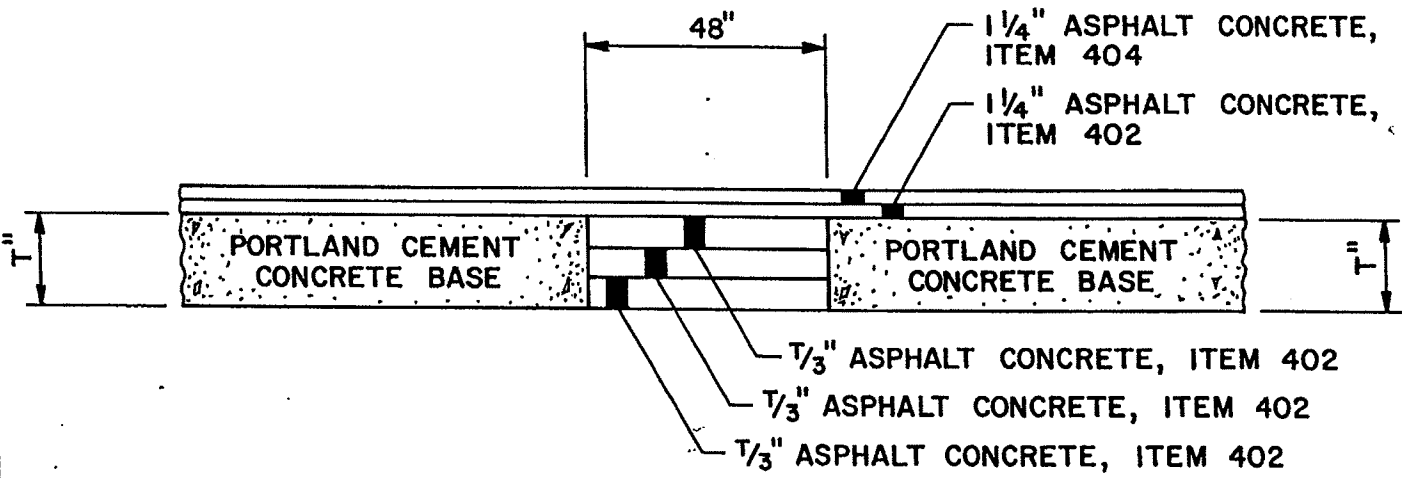

SECTION A-A / FOR CONCRETE BASE PAVEMENT

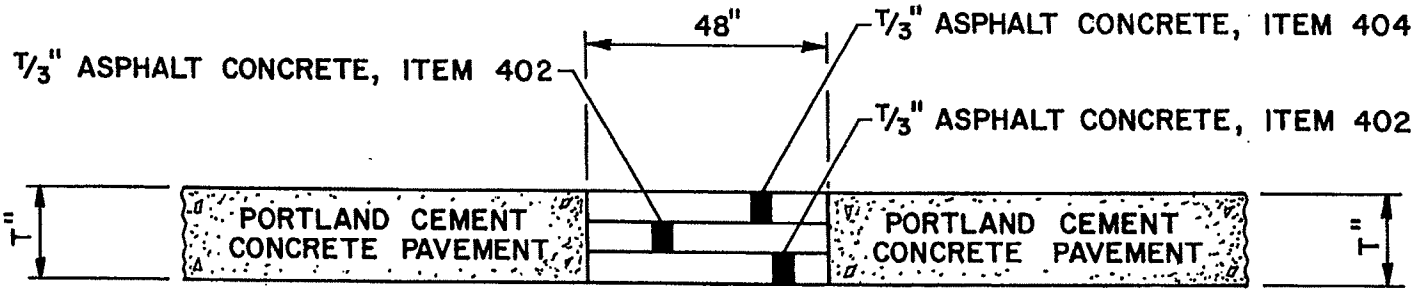

SECTION A-A FOR CONCRETE PAVEMENT

2" EXPANSION MATERIAL SHALL BE PLACED AT THE P.C. AND P.T. IN THE CONCRETE CURB WHERE POURED SEPARATELY. WHERE CURB AND PAVEMENT ARE POURED INTEGRALLY, 48" ASPHALT CONCRETE STRIP IS TO EXTEND TO THE BACK OF CURB.

APPROVED
EVANS, MECHWART, HAMBLETON & TILTON, INC.
By
CITY ADMINISTRATOR

EXPANSION JOINT DETAIL AT CURVE POINTS

CITY OF GROVE CITY, OHIO

STANDARD CONSTRUCTION DRAWING

REV.	DATE	DWG. Nº
11-23-92	12-14-87	C-GC-59