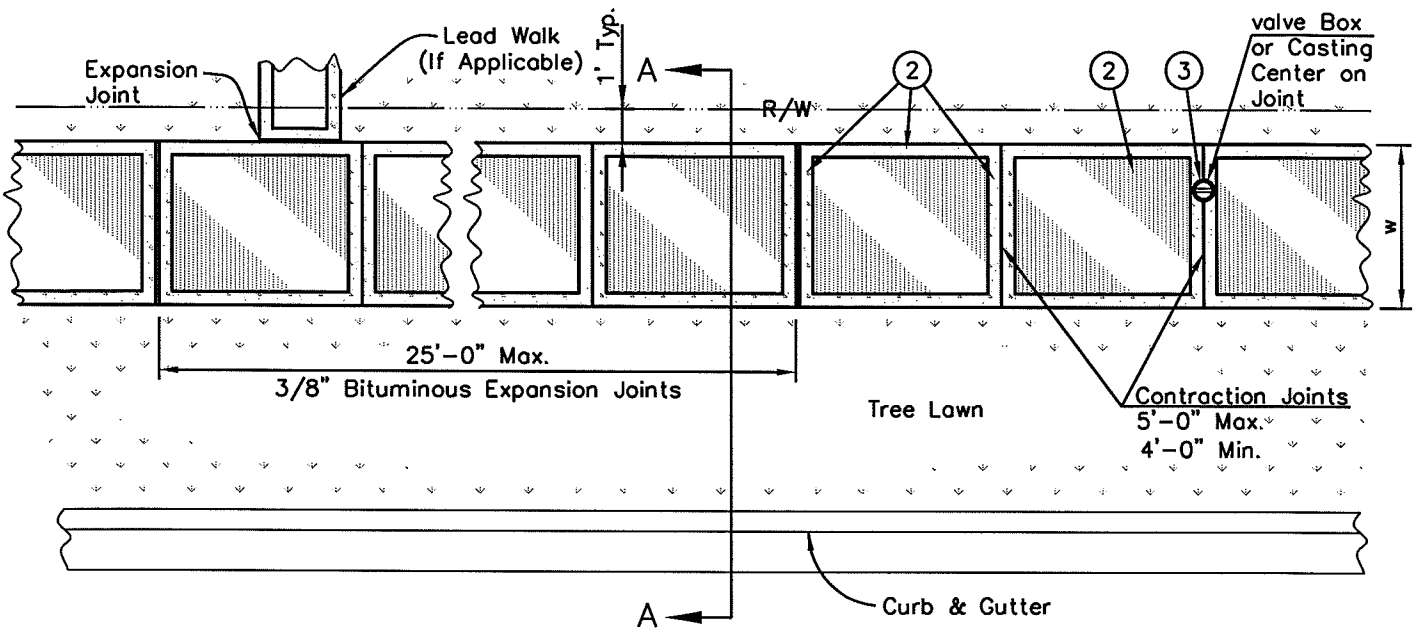

SIDEWALK PLAN

W= 4' for Residential
W= 5' for Arterial

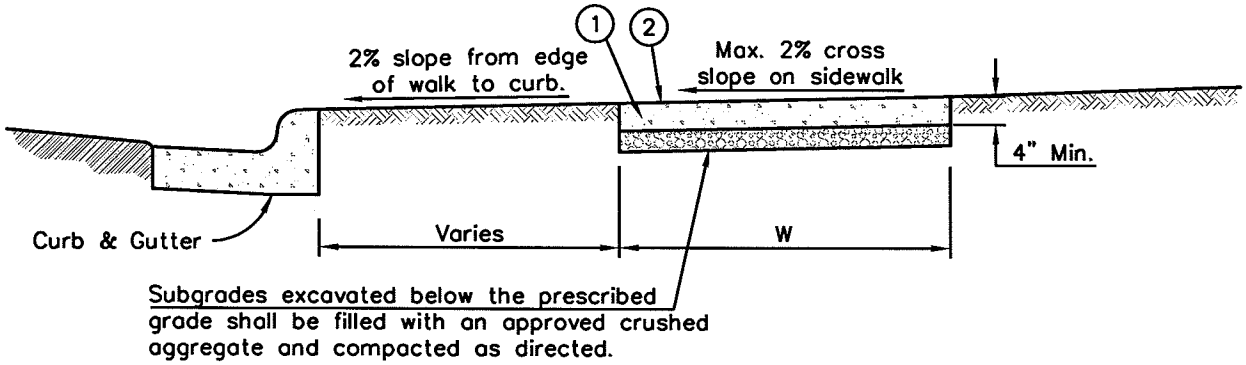

SECTION "A-A"

NOTES

1. Sidewalks shall be constructed according to Item 608, ODOT CMS, current edition.
2. All joints and edges to be tooled after broom finish.
3. All castings within sidewalk shall be set flush with concrete and bolted down, 1/4" max. lip.
4. All concrete shall be Item 499, ODOT Class "S", Air Entrained Concrete w/57 Limestone Aggregate and 715 lbs. of cement per C.Y., maximum 4" slump, broom fininsh with edge trowel. No Fly Ash or GGBFS in concrete.
5. Contraction joints as shown, sawn not less than 2" deep.

	TYPICAL SIDEWALK DETAIL	CITY OF GROVE CITY, OHIO		
		STANDARD CONSTRUCTION DRAWING		
		Effective Date 10-31-05	Revision Date 11-15-05	Dwg. No. C-GC-46A