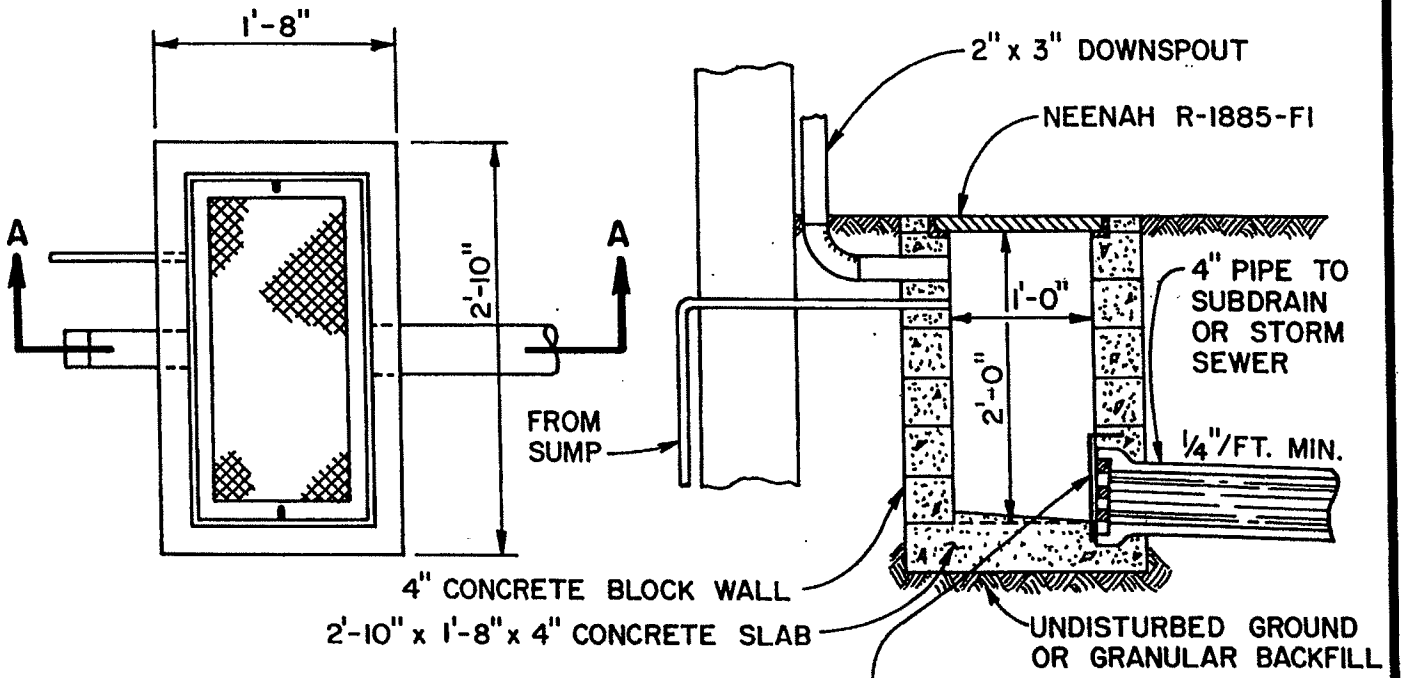

OUTSIDE PAVEMENT

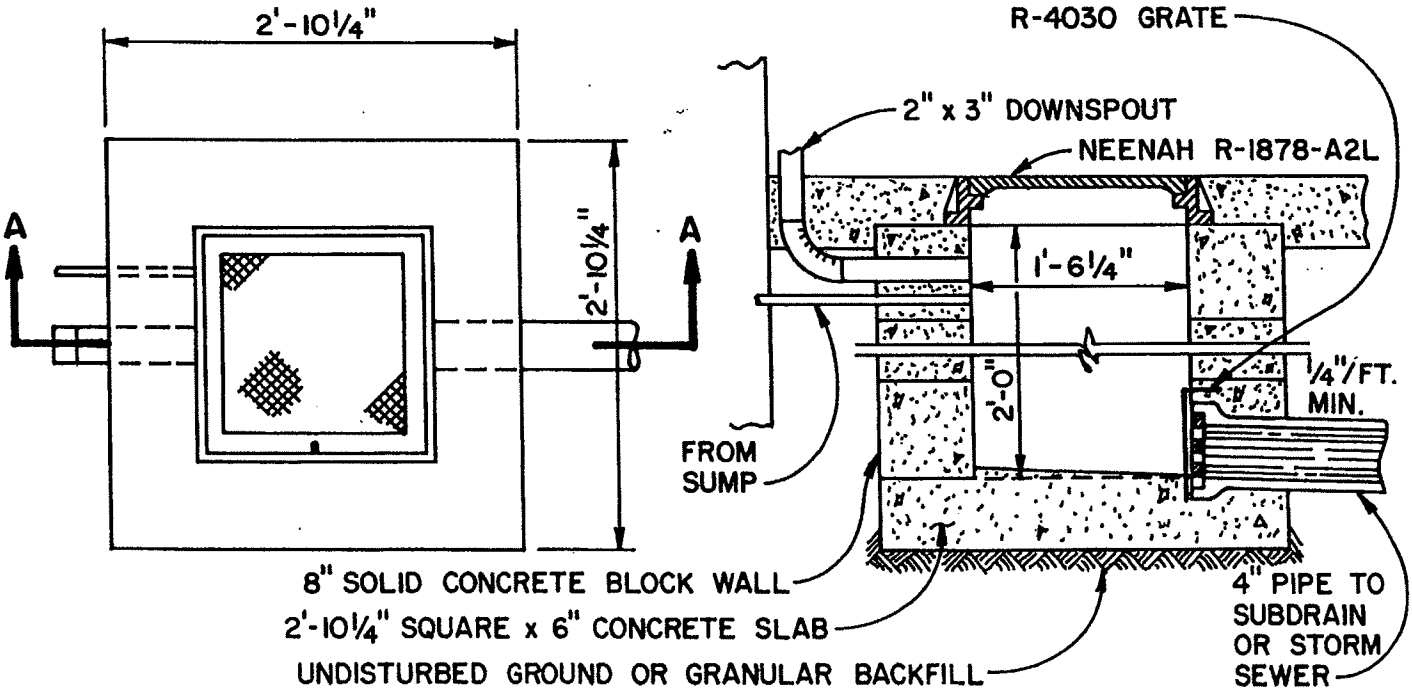

UNDER PAVEMENT

APPROVED
EVANS, MECHWART, HAMBLETON & TILTON, INC.
By
CITY ADMINISTRATOR

RESIDENTIAL
ROOF & BASEMENT
JUNCTION BOX

CITY OF
GROVE CITY, OHIO

STANDARD
CONSTRUCTION DRAWING

REV.	DATE	DWG. Nº
10-10-90		C-GC-28