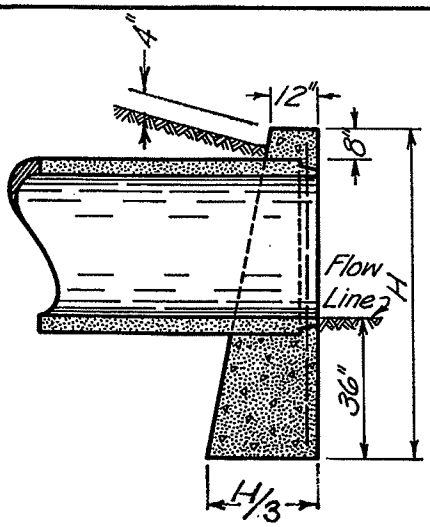

SECTION A-A

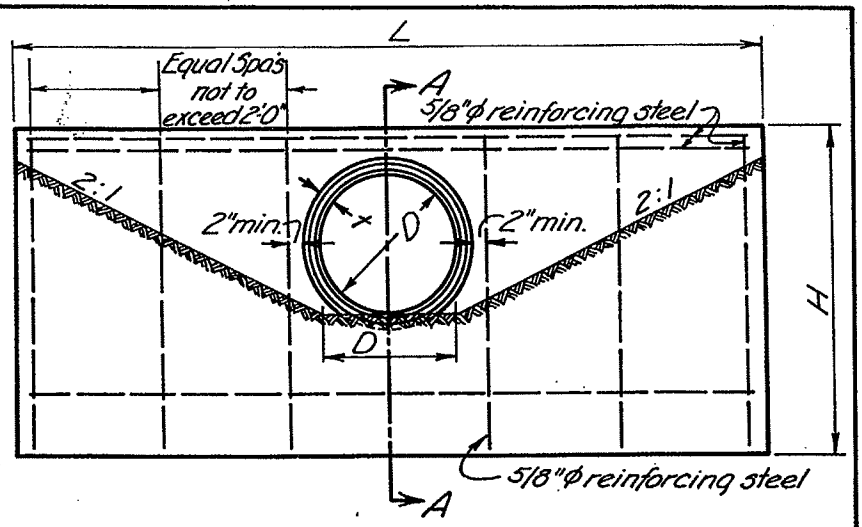

ELEVATION

DIMENSIONS			QUANTITIES	
DIAMETER	H	L	CONCRETE CU. YDS.	REIN. STEEL LBS.
15"	5'-2"	7'-0"	1.7	41
18"	5'-5"	8'-4"	2.2	57
21"	5'-8"	9'-8"	2.8	62
24"	5'-11"	11'-0"	3.3	69
30"	6'-5"	13'-8"	4.7	92
36"	7'-0"	16'-4"	6.5	105

L = CIRCULAR SECTIONS = 5D + 4t
L = ELLIPTICAL OR PIPE-ARCH = 4R + 4t + S
H = CIRCULAR SECTIONS = D + t + 44"
H = ELLIPTICAL OR PIPE-ARCH = R + t + 44"

D = DIAMETER OF PIPE
R = RISE OF PIPE
S = SPAN OF PIPE
t = THICKNESS OF BARREL
L = LENGTH OF HEADWALL
H = HEIGHT OF HEADWALL

HEADWALL where required will be provided for nonskewed culverts having a diameter or rise of 36" or less.

CONCRETE shall be class "C".

REINFORCING STEEL BARS shall be no. 5 round bars.

DIMENSIONS AND QUANTITIES are shown for circular sections only. It will be necessary to determine dimensions for the headwall required for reinforced elliptical concrete pipe or corrugated metal pipe arches in accordance with the equations listed on this drawing.

Approved 23 Dec 72
Date

City Engineer

PIPE HEADWALL

City of Grove City Ohio

Standard Construction Drawing

Rev. 7-17-75

C-GC-24