PROPERTY DATA:

PARCEL ID:	040-002135-00
ADDRESS:	2410 STRINGTOWN ROAD, GROVE CITY, OHIO 43123
PROPERTY AREA:	7.87± ACRES (342,817 ± S.F.)
ZONING:	C2 – RETAIL COMMERCIAL
PROPOSED USE:	SERVICE STATION / CONVENIENCE STORE
BUILDING SETBACKS:	FRONT (30 FEET); SIDE (6 FEET)
BUILDING AREA:	179± S.F. (0.43%)
CANOPY AREA:	7170± S.F. (17.42%)
BUILDING COVERAGE AREAS:	REQUIRED: <75.00% PROPOSED: 86,600± S.F. (25.3%)
OPEN SPACE AREA:	11,344± S.F. (27.56% OF PROPERTY)

A. GENERAL NOTES

1. GENERAL SCOPE OF WORK INCLUDES:

   BUILDING
   CANOPY
   FUEL TANKS
   PIPING AND DISPENSERS
   PARKING

2. REQUIRED PARKING:
   RETAIL STORES = 1 SPACE PER 50 S.F.
   179 S.F. = 4 SPACES

   PROVIDED PARKING: (PARKING DIMENSIONS: 9'Wx18'L)
   (1) ADA PARKING SPACE
   (6) STANDARD PARKING SPACES

B. SITE WORK

1. PROPOSED DRIVE APPROACH

C. BUILDING

1. STANDARD KROGER FUEL CENTER BUILDING (8'-2" X 21'-10")

D. DISPENSERS

1. (8) 3 PRODUCT DISPENSERS, SUMPS, AND ISLANDS

E. UNDERGROUND STORAGE TANKS

1. UNDERGROUND FUEL STORAGE TANKS

F. CANOPY

1. 126' x 43' x 19' CANOPY PER CURRENT STANDARDS.

G. YARD

1. AIR ISLAND
2. CONCRETE TANK SLAB
3. CONCRETE PAVEMENT
4. BUILDING LANDSCAPE STRIP
5. WATER ISLAND
6. ASPHALT PAVEMENT

NOTES:

SPECIAL USE FOR FUEL CENTER WITHIN C-2 ZONING.

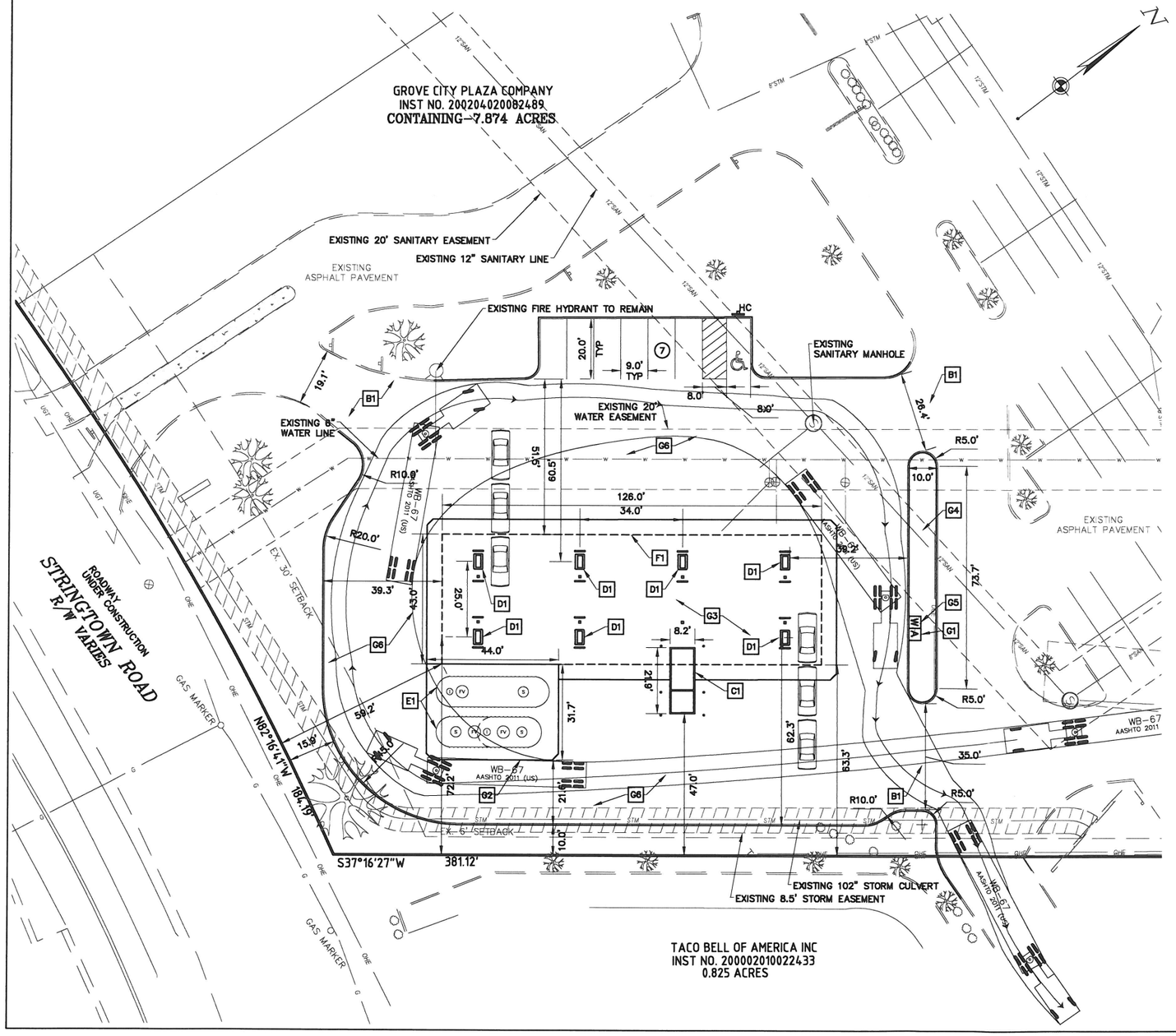

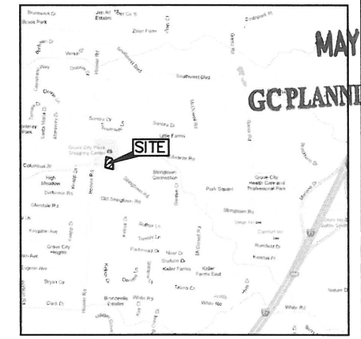

LOCATION MAP
NO SCALE

MAY 2 2013
GC PLANNING COMMISSION

OWNER:
GROVE CITY PLAZA CO.
191 W. NATIONWIDE BLVD, #200
COLUMBUS, OHIO 43215

DEVELOPER:
THE KROGER CO.
4111 EXECUTIVE PARKWAY
WESTERVILLE, OHIO 43081
PHONE: (614) 898-3338

ENGINEER:
CESO INC.
2800 CORPORATE EXCHANGE DRIVE
SUITE 160
COLUMBUS, OHIO. 43231
PHONE: (614) 794-7080

LEGEND

EXISTING

- EX. DRAINAGE MANHOLE
- EX. CURB INLET
- EX. CATCH BASIN
- EX. FIRE HYDRANT
- EX. WATER VALVE
- EX. WATER MANHOLE
- EX. WATER METER
- EX. POWER POLE
- EX. TELEPHONE POLE
- EX. GAS VALVE
- EX. SIGN
- EX. BOLLARD
- EX. MAILBOX
- ST — EX. STORM SEWER
- W — EX. WATER LINE
- G — EX. GAS LINE
- OHE — EX. OVERHEAD ELECTRIC
- EX. FENCE
- 1120 — EX. CONTOUR (MAJOR)
- 1117 — EX. CONTOUR (MINOR)
- TC — EX. TELECOMMUNICATION
- SS — EX. STORM SEWER

PROPOSED

- PROP. CATCH BASIN
- PROP. DRAINAGE MANHOLE
- PROP. CLEANOUT
- PROP. DOWN SPOUT
- PROP. SANITARY MANHOLE
- PROP. SANITARY CLEANOUT
- PROP. LIGHT
- PROP. AIR STATION
- PROP. CONCRETE STOP
- PROP. DETECTABLE STRIP
- PROP. MONUMENT SIGN
- PROP. GAS PUMP
- SAN — PROP. SANITARY SEWER
- STM — PROP. STORM SEWER
- W — PROP. WATER LINE
- G — PROP. GAS SERVICE
- UGE — PROP. U.G. ELECTRIC
- PROP. LIMITS OF DISTURBANCE

OHIO Utilities Protection SERVICE
811 or 1-800-362-2764 Call Before You Dig

20 0 10 20 40
GRAPHIC SCALE (IN FEET)
1 inch = 20 ft.

REVISIONS NO.	DATE	DESCRIPTION

The Kroger Co.
Supermarket
Petroleum Group
Kroger
Denver, CO 80239
Phone (303) 715-5601
Fax (303) 715-5605

ZONING PLAN

KROGER FUEL CENTER – N341

2474 STRINGTOWN ROAD GROVE CITY, OHIO

NOT FOR CONSTRUCTION

CESO
ENGINEERS • ARCHITECTS
SURVEYORS
2800 CORPORATE EXCHANGE DR. | COLUMBUS, OHIO 43231
PH (614) 794-7080 | FAX (614) 794-4492
WWW.CESOINC.COM

ISSUE:	ZONING
DATE:	05.20.2013
JOB NO.:	5138
DESIGN:	CBW
DRAWN:	JTD
CHECKED:	NRH
SHEET NO.	Z1

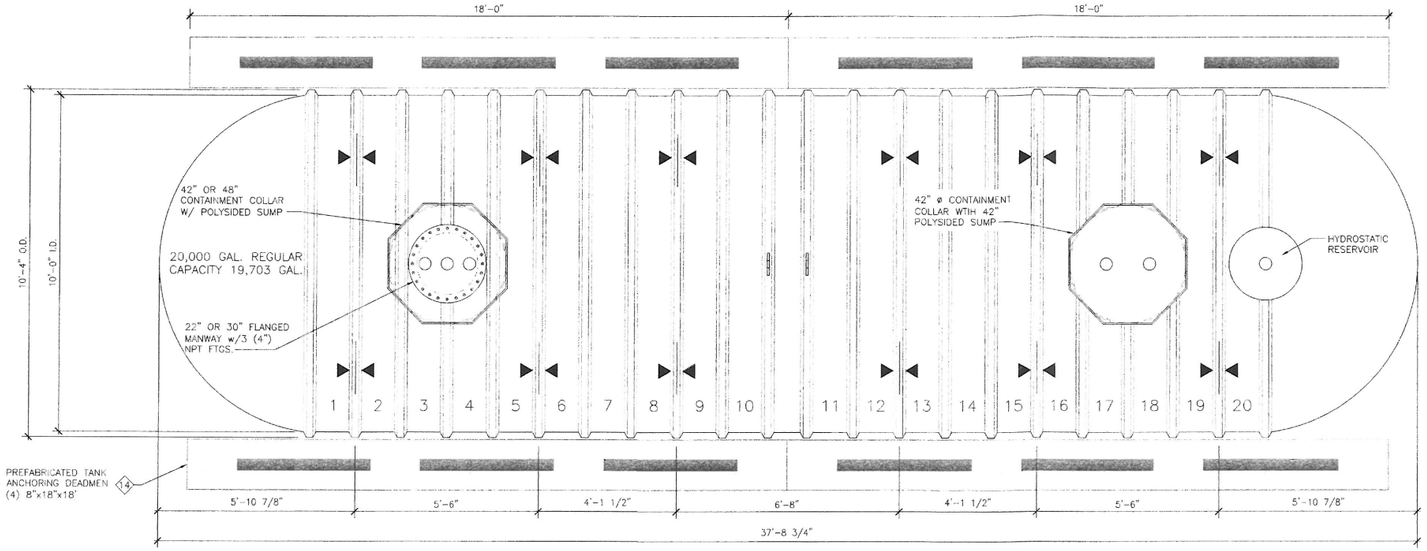

1 UNDERGROUND TANK PLAN (2)

SCALE: 1/2" = 1'-0"

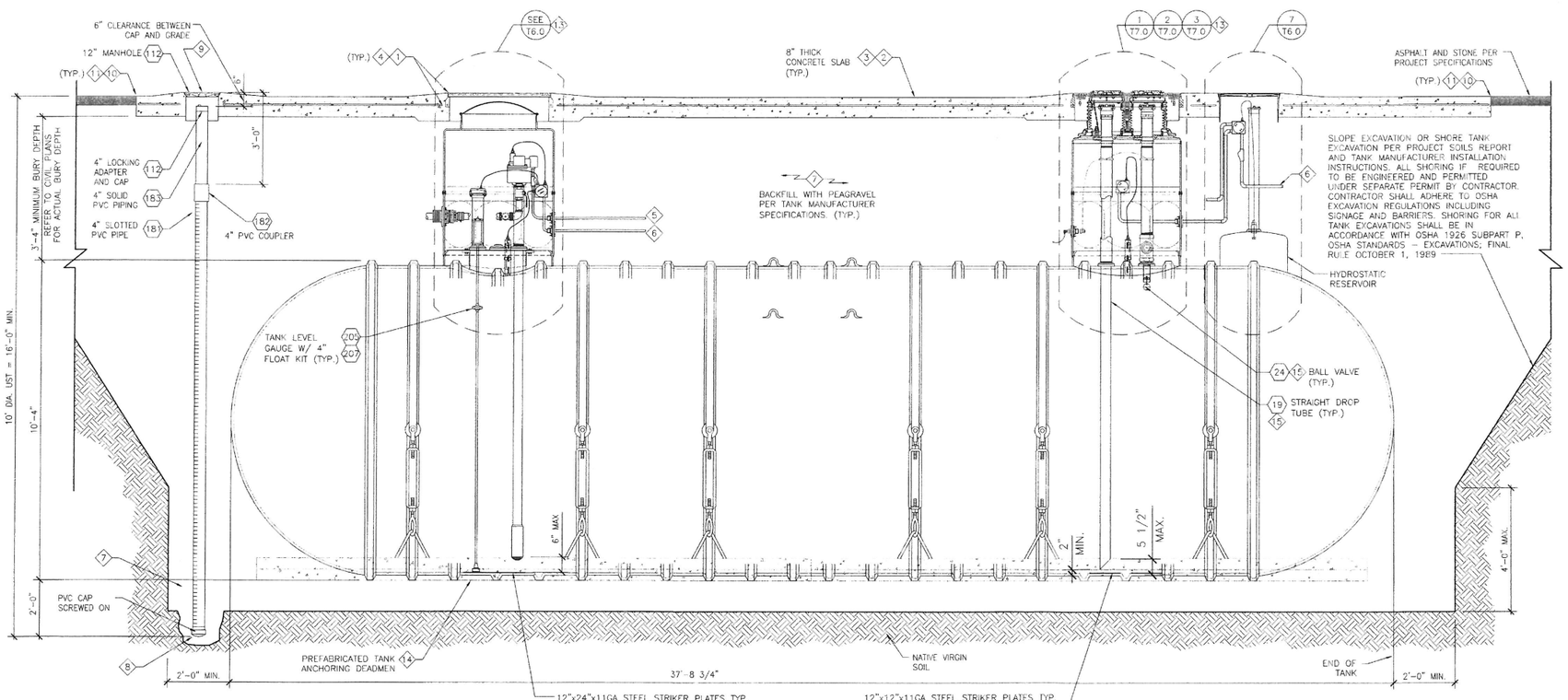

2 UNDERGROUND TANK SECTION (2)

SCALE: 1/2" = 1'-0"

#	SHEET NOTES
1	SET RIM OF ALL MANHOLES AT 1" ABOVE SURROUNDING GRADE. SLOPE CONCRETE AWAY FROM TOP OF RIM 3% MAX. SLOPE
2	FIBERMESH REINFORCEMENT TO BE USED. PREMIX UNIFORMLY THROUGHOUT CONCRETE. REINFORCE ENTIRE SLAB WITH #4 REBAR AT 12" O.C. EACH WAY
3	REINFORCING BARS TO BE NO LESS THAN 2" AND NO MORE THAN 4" FROM SURFACE.
4	REINFORCE CONCRETE SLAB AROUND MANHOLE WITH 2 ROWS OF (4) #4 REBAR 60" IN LENGTH. PLACE REBAR 6" FROM SIDES OF BOX.
5	SINGLE 3/4" CONDUIT TO EACH SUBMERSIBLE PUMP. PROVIDE SEAL-OFF AT SUMP & BUILDING WIRING TROUGH. CONTAINS LINE VOLTAGE WIRING.
6	SINGLE 1" MONITORING CONDUIT HOME RUN TO EACH TANK. LOOP 3/4" CONDUIT RUNS FROM INTERSTITIAL SENSOR LOCATION TO CONTAINMENT SUMP SENSORS, TANK GAUGES & PLLD's. PROVIDE SEAL-OFF IN BUILDING & AT TANK. ROUTE TO INTRINSICALLY SAFE TROUGH IN BUILDING. CONTAINS ONLY LOW VOLTAGE WIRING FOR SENSORS.
7	USE PEA GRAVEL CONSISTING OF NATURALLY ROUNDED AGGREGATE, MIN 1/4" & MAX OF 1/2" IN SIZE, FREE OF CLAY, SLAG, CINDERS, OR DEBRIS. ALL SUBSTITUTES MUST BE APPROVED BY MANUFACTURER'S & OWNER'S FIELD REPRESENTATIVE.
8	4" OBSERVATION SUMP DEPTH SHALL BE 24" BELOW TANK. DO NOT PENETRATE SOIL. DO NOT USE PVC CEMENT ON BOTTOM CAP OR OTHER COUPLINGS OR FITTINGS.
9	TANK EXCAVATION OBSERVATION MANHOLE (2). INSTALLED WITH TANKS, DO NOT DRILL AFTER INSTALLATION.
10	TANK PAD MINIMUM 3'-0" OFF OUTSIDE WALLS OF TANKS, AND MUST COVER THE FOOTPRINT OF THE TANKS. REQUIRED TO PROVIDE FOR PROPER TANK HOLD DOWN, AND TO PREVENT ACCIDENTAL DRILLING INTO TANK.
11	CHAMFER CUT SLAB CORNERS WHERE MEETING ASPHALT PAVING ONLY. SQUARE CUT CORNERS WHERE MEETING CONCRETE.
12	REFER TO SITE SPECIFIC PLANS FOR ACTUAL PIPE RUNS & NUMBER OF PRODUCT LINES (1 OR 2 PER UST SUMP).
13	TURBINE AND FILL SIDE SUMP CONFIGURATION SHOWN IS TYPICAL. FOR SPECIFIC DESIGN CRITERIA AT THESE SUMPS SEE ACCOMPANYING TANK INSTALLATION SITE PLAN & SUMP DETAIL DRAWINGS.
14	TANK ANCHORING. CONSULT LOCAL REGULATIONS AND VERIFY REQUIREMENTS WITH OWNER'S REPRESENTATIVE.
15	BALL FLOAT VALVE IS PROVIDED AND DESIGNED FOR UST OVERFILL COMPLIANCE. BALL FLOAT SYSTEM SET AT 30 MINUTES AND IS ACCOMPANIED WITH AN AUDIBLE AND VISUAL OVERFILL ALARM SET AT 95% AND IS IN ACCORDANCE WITH FEDERAL AND STATE GUIDELINES FOR UST OVERFILL REQUIREMENTS.

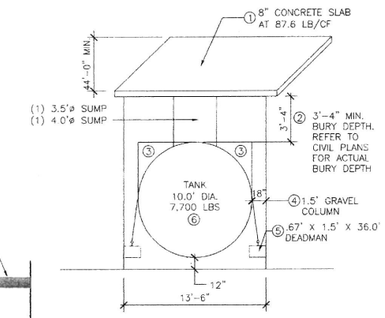

BUOYANCY CALCULATIONS

CALCULATION BASED ON SUBMERGED WEIGHT OF ALL MATERIALS: TANK WITH SPHERICAL ENDS.
10'-4" DIA. (10' NOMINAL) TANK LENGTH: 37' 8-3/4"
TRY 36'-0" DEADMAN, EACH SIDE, 18" WIDE X 8" HIGH

EMPTY TANK UPLIFT = 19,703 GAL / 7.48 GAL/CF = 2,634 CU FT

2634 CU FT X 62.4 LBS/CF = 164,362 LBS (DISPLACED WATER)

TANK SUMP UPLIFT = (1) X 3.14 X $2.00'^2$ X 3' = 37.7 CU FT
+ (1) X 3.14 X $1.75'^2$ X 3' = 28.8 CU FT

66.5 CF X 62.4 LBS/CU FT = 4,150 LBS (DISPLACED WATER)

TOTAL TANK UPLIFT = 164,362 LBS + 4,150 LBS = 168,512 LBS

HOLD DOWN CALCULATION

(1) TANK SLAB: .67' X 13.5' X 44.0' = 396.2 CU FT
396.2 CU FT X 87.6 LBS/CU FT = 34,707 LBS

(2) CUBED BACKFILL ABOVE TANK:
3.33' X 10.0' X 37.73' = 1,256.4 CU FT – 88.7 CU FT = 1,167.7 CF
1,167.7 CU FT X 57.6 LBS/ CU FT = 67,259 LBS

(3) CURVED BACKFILL ABOVE TANK:
3.14 X $5.0'^2$ X 37.73' = 2,963.3 CU FT
10.0' X 10.0' X 37.73' = 3,773.0 CU FT
3,773.0 CU FT – 2,963.3 CU FT = 809.7 CU FT / 2 = 404.9 CU FT
404.9 CU FT X 57.6 LBS/ CU FT = 23,322 LBS

(4) GRAVEL COLUMN ABOVE DEADMEN:
1.5' X 13.5' X 36.0' X 2 = 1,458 CU FT
1,458 CU FT X 57.6 LBS/ CU FT = 83,981 LBS

(5) CONCRETE DEADMEN:
.67' X 1.5' X 36.0' = 36.0 CU FT
36.0 FT X 87.6 LBS/ CU FT X (2) = 6,307 LBS

(6) DRY WEIGHT OF TANK: 7,700 LBS

TOTAL HOLD DOWN: 223,276 LBS

TOTAL HOLD DOWN: 223,276 LBS = 1.33 SAFETY FACTOR
TOTAL TANK UPLIFT: 168,512 LBS

THIS DRAWING IS AND SHALL REMAIN THE PROPERTY OF THE KROGER COMPANY REPRODUCTION OR ALTERATION OF THIS DRAWING WITHOUT THE EXPRESS WRITTEN PERMISSION OF THE KROGER COMPANY IS PROHIBITED. (NOT PUBLISHED: ALL RIGHTS RESERVED)

NOTE TO CONTRACTOR:
THIS SET OF DRAWINGS AND DOCUMENTS IS INTENDED AS A SET OF GUIDELINES FOR THE PROJECT AND ARE INTENDED TO BE USED IN CONJUNCTION WITH A SET OF CONSTRUCTION SPECIFICATIONS TO BE SUPPLIED BY OWNER. THEY MUST BE READ TO INCORPORATE ALL APPLICABLE FEDERAL, STATE, AND LOCAL CODES INCLUDING FEDERAL A.D.A. REQUIREMENTS. THIS SET ASSUMES THAT THERE ARE NO UNUSUAL SOIL CONDITIONS OR WIND LOADS. THE FAILURE OF THIS CONDITION MAY REQUIRE SIGNIFICANT CHANGES TO THESE DOCUMENTS. IT IS THE RESPONSIBILITY OF THE GENERAL CONTRACTOR TO CONFORM TO ALL APPLICABLE CODES AND TO INFORM THE OWNERS/ARCHITECTS OF ANY QUESTIONS OR CLARIFICATIONS WHICH ARE DESIRED. CONTRACTORS SHALL ALSO VISIT THE SITE BEFORE BIDDING. CONTRACTORS ARE REQUIRED TO KNOW ALL OBSERVABLE CONDITIONS AND APPLICABLE CODES.

The Kroger Co.
Supermarket Petroleum Group
Denver, CO 80239
Phone (303) 715-5901
Fax (303) 715-5902

Kroger

STATE OF OHIO
DAVID A. GUETIG
66325
REGISTERED PROFESSIONAL ENGINEER

REVISIONS

No.	DESCRIPTION	DES. BY	DRAWN BY	DATE

Project #:	#N598
Designed By:	MDC
Drawn By:	SEF
Checked By:	MDC
Date:	MARCH, 2012
Scale:	FULL
Disk File:	KroN00598_T3.0-TANK
Model:	CORE T3.0 (GD)
Address:	85 N. Wilson Road Columbus, OH

20,000 GALLON TANK PLAN AND SECTION INSTALLATION DETAILS

Drawing No.: T3.0

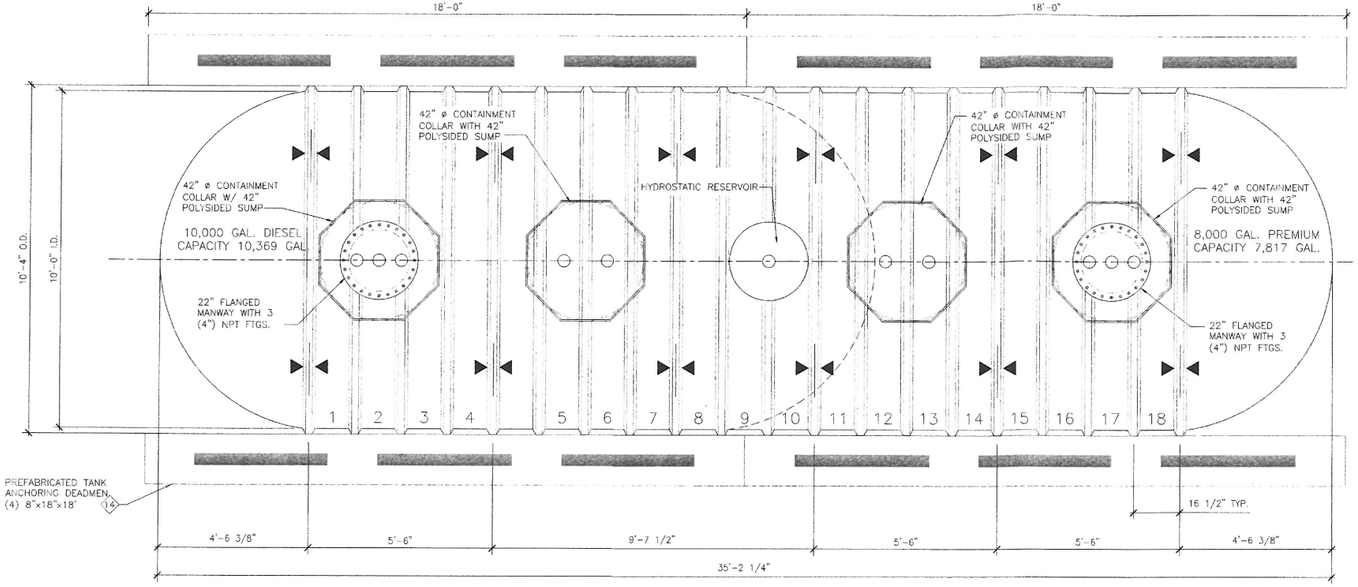

1 UNDERGROUND TANK PLAN (3)

SCALE: 1/2" = 1'-0"

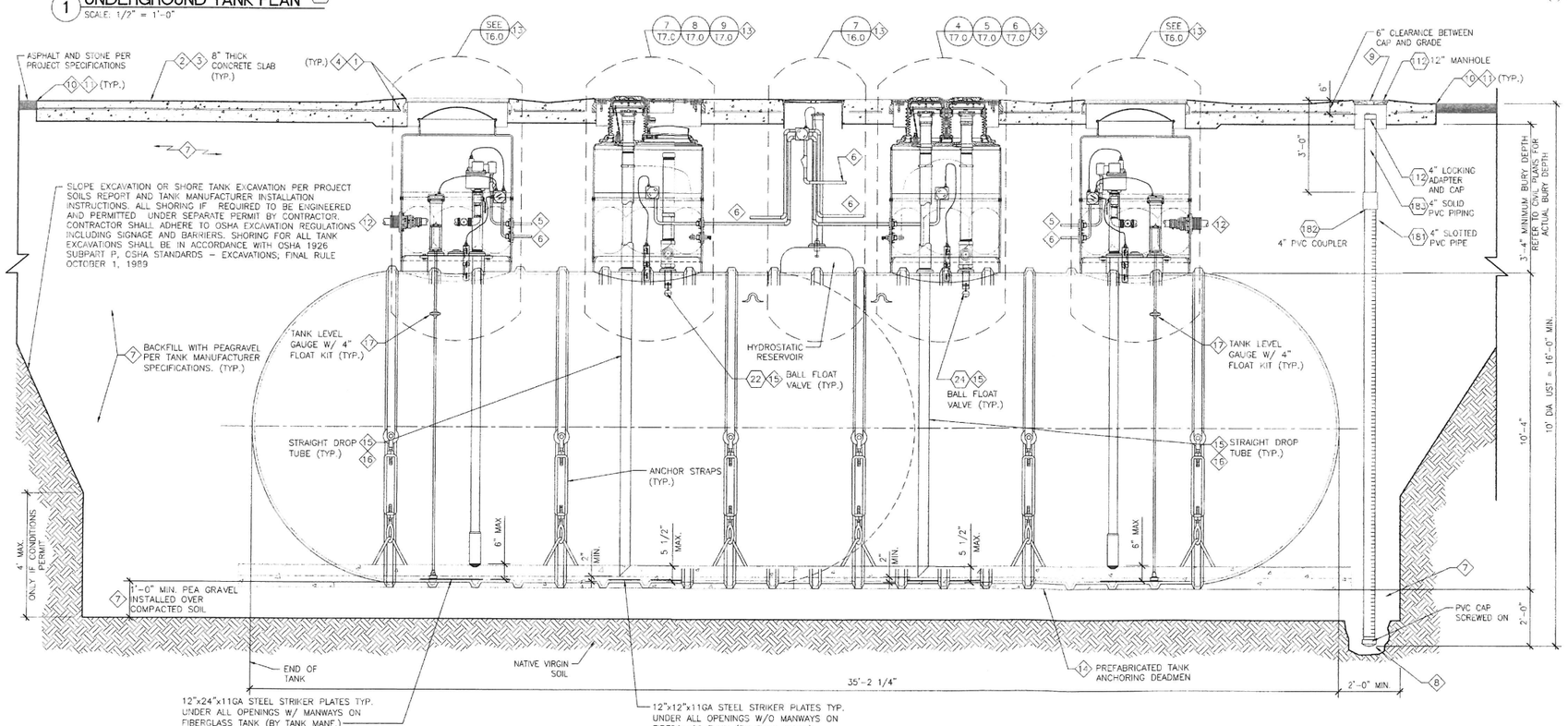

2 UNDERGROUND TANK SECTION (3)

SCALE: 1/2" = 1'-0"

SHEET NOTES

#	
1	SET RIM OF ALL MANHOLES AT 1" ABOVE SURROUNDING GRADE. SLOPE CONCRETE AWAY FROM TOP OF RIM 3% MAX. SLOPE.
2	FIBERMESH REINFORCEMENT TO BE USED. PREMIX UNIFORMLY THROUGHOUT CONCRETE. REINFORCE ENTIRE SLAB WITH #4 REBAR AT 12" O.C. EACH WAY
3	REINFORCING BARS TO BE NO LESS THAN 2" AND NO MORE THAN 4" FROM SURFACE.
4	REINFORCE CONCRETE SLAB AROUND MANHOLE WITH 2 ROWS OF (4) #4 REBAR 60" IN LENGTH. PLACE REBAR 6" FROM SIDES OF BOX.
5	SINGLE 3/4" COATED CONDUIT TO EACH SUBMERSIBLE PUMP. PROVIDE SEAL-OFF AT SUMP & BUILDING WIRING TROUGH. CONTAINS LINE VOLTAGE WIRING.
6	SINGLE 1" MONITORING CONDUIT HOME RUN TO EACH TANK. LOOP 3/4" CONDUIT RUNS FROM INTERSTITIAL SENSOR LOCATION TO CONTAINMENT SUMP SENSORS, TANK GAUGES & PLLD's. PROVIDE SEAL-OFF IN BUILDING & AT TANK. ROUTE TO INTRINSICALLY SAFE TROUGH IN BUILDING. CONTAINS ONLY LOW VOLTAGE WIRING FOR SENSORS.
7	USE PEA GRAVEL CONSISTING OF NATURALLY ROUNDED AGGREGATE, MIN 1/4" & MAX OF 1/2" IN SIZE, FREE OF CLAY, SLAG, CINDERS, OR DEBRIS. ALL SUBSTITUTES MUST BE APPROVED BY MANUFACTURER'S & OWNER'S FIELD REPRESENTATIVE.
8	4" OBSERVATION SUMP DEPTH SHALL BE 24" BELOW TANK. DO NOT PENETRATE SOIL. DO NOT USE PVC CEMENT ON BOTTOM CAP OR OTHER COUPLINGS OR FITTINGS.
9	TANK EXCAVATION OBSERVATION MANHOLE (2). INSTALLED WITH TANKS, DO NOT DRILL AFTER INSTALLATION.
10	TANK PAD MINIMUM 3'-0" OFF OUTSIDE WALLS OF TANKS, AND MUST COVER THE FOOTPRINT OF THE TANKS. REQUIRED TO PROVIDE FOR PROPER TANK HOLD DOWN, AND TO PREVENT ACCIDENTAL DRILLING INTO TANK.
11	CHAMFER CUT SLAB CORNERS WHERE MEETING ASPHALT PAVING ONLY. SQUARE CUT CORNERS WHERE MEETING CONCRETE.
12	REFER TO SITE SPECIFIC PLANS FOR ACTUAL PIPE RUNS & NUMBER OF PRODUCT LINES (1 OR 2 PER UST SUMP).
13	TURBINE AND FILL SIDE SUMP CONFIGURATION SHOWN IS TYPICAL. FOR SPECIFIC DESIGN CRITERIA AT THESE SUMPS SEE ACCOMPANYING TANK INSTALLATION SITE PLAN & SUMP DETAIL DRAWINGS.
14	TANK ANCHORING: CONSULT LOCAL REGULATIONS AND VERIFY REQUIREMENTS WITH OWNER'S REPRESENTATIVE.
15	BALL FLOAT VALVE IS PROVIDED AND DESIGNED FOR UST OVERFILL COMPLIANCE. BALL FLOAT SYSTEM SET AT 30 MINUTES AND IS ACCOMPANIED WITH AN AUDIBLE AND VISUAL OVERFILL ALARM SET AT 95% AND IS IN ACCORDANCE WITH FEDERAL AND STATE GUIDELINES FOR UST OVERFILL REQUIREMENTS.
16	DROP TUBE: FOR GASOLINE AND DIESEL APPLICATIONS USE ITEM (19) FOR E-85 APPLICATIONS USE ITEM (20)
17	TANK LEVEL GAUGE PROBE AND FLOAT KIT: FOR GASOLINE APPLICATIONS USE ITEMS (205)(207) FOR DIESEL APPLICATIONS USE ITEMS (205)(208) FOR E-85 APPLICATIONS USE ITEMS (206)(209)

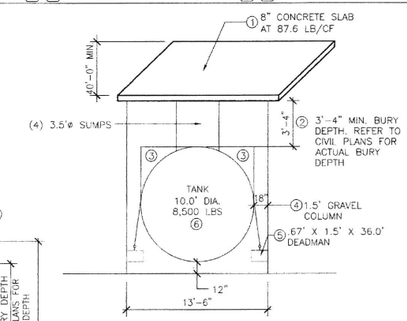

BUOYANCY CALCULATIONS

CALCULATION BASED ON SUBMERGED WEIGHT OF ALL MATERIALS: TANK WITH SPHERICAL ENDS.
10'-4" DIA. (10' NOMINAL) TANK LENGTH: 35'-2 1/4"
TRY 36'-0" DEADMAN, EACH SIDE, 18" WIDE X 8" HIGH

EMPTY TANK UPLIFT = $\frac{18{,}186 \text{ GAL}}{7.48 \text{ GAL./CF}}$ = 2431 CU FT

2431 CU FT X 62.4 LBS/CF = 151,694 LBS (DISPLACED WATER)

TANK SUMP UPLIFT = (4) X 3.14 X 1.75^2 X 3' = 115.4 CU FT

115.4 CF X 62.4 LBS/CU FT = 7,201 LBS (DISPLACED WATER)

TOTAL TANK UPLIFT = 151,694 LBS + 7,201 LBS = 158,895 LBS

HOLD DOWN CALCULATION

(1) TANK SLAB: .67' X 13.5' X 40.0' = 361.8 CU FT
361.8 CU FT X 87.6 LBS/CU FT = 31,694 LBS

(2) CUBED BACKFILL ABOVE TANK:
3.33' X 10.0' X 35.19' = 1,171.8 CU FT – 153.9 CU FT = 1,017.9 CF
1,017.9 CU FT X 57.6 LBS/ CU FT = 58,631 LBS

(3) CURVED BACKFILL ABOVE TANK:
3.14 X $5.0'^2$ X 35.19' = 2,762.4 CU FT
10.0' X 10.0' X 35.19' = 3,519.0 CU FT
3,519.0 CU FT – 2,762.4 CU FT = $\frac{756.6 \text{ CU FT}}{2}$ = 378.3 CU FT
378.3 CU FT X 57.6 LBS/ CU FT = 21,790 LBS

(4) GRAVEL COLUMN ABOVE DEADMEN:
1.5' X 13.5' X 36.0' X 2 = 1,458 CU FT
1,458 CU FT X 57.6 LBS/ CU FT = 83,981 LBS

(5) CONCRETE DEADMEN:
.67' X 1.5' X 36.0' = 36.0 CU FT
36.0 CU FT X 87.6 LBS/ CU FT X (2) = 6,307 LBS

(6) DRY WEIGHT OF TANK: 8,500 LBS

TOTAL HOLD DOWN: 210,903 LBS

TOTAL HOLD DOWN: 210,903 LBS
TOTAL TANK UPLIFT: 158,895 LBS = 1.33 SAFETY FACTOR

THIS DRAWING IS AND SHALL REMAIN THE PROPERTY OF THE KROGER COMPANY REPRODUCTION OR ALTERATION OF THIS DRAWING WITHOUT THE EXPRESS WRITTEN PERMISSION OF THE KROGER COMPANY IS PROHIBITED. (NOT PUBLISHED: ALL RIGHTS RESERVED)

NOTE TO CONTRACTOR:
THIS SET OF DRAWINGS AND DOCUMENTS IS INTENDED AS A SET OF GUIDELINES FOR THE PROJECT AND ARE INTENDED TO BE USED IN CONJUNCTION WITH A SET OF CONSTRUCTION SPECIFICATIONS TO BE SUPPLIED BY OWNER. THEY MUST BE READ TO INCORPORATE ALL APPLICABLE FEDERAL, STATE, AND LOCAL CODES INCLUDING FEDERAL A.D.A. REQUIREMENTS. THIS SET ASSUMES THAT THERE ARE NO UNUSUAL SOIL CONDITIONS OR WIND LOADS. THE FAILURE OF THIS CONDITION MAY REQUIRE SIGNIFICANT CHANGES TO THESE DOCUMENTS. IT IS THE RESPONSIBILITY OF THE GENERAL CONTRACTOR TO CONFORM TO ALL APPLICABLE CODES AND TO INFORM THE OWNERS/ARCHITECTS OF ANY QUESTIONS OR CLARIFICATIONS WHICH ARE DESIRED. CONTRACTORS SHALL ALSO VISIT THE SITE BEFORE BIDDING. CONTRACTORS ARE REQUIRED TO KNOW ALL OBSERVABLE CONDITIONS AND APPLICABLE CODES.

The Kroger Co.
Supermarket
Petroleum Group
Denver, CO 80236
Phone: (303) 715-5901
Fax: (303) 715-5905

Kroger

STATE OF OHIO
DAVID A GUETIG
66325
REGISTERED
PROFESSIONAL ENGINEER
3/19/12

REVISIONS

No.	DESCRIPTION	DES. BY	DRAWN BY	DATE

Project #:	#N598
Designed By:	MDC
Drawn By:	SEF
Checked By:	MDC
Date:	MARCH, 2012
Scale:	FULL
Disk File:	KroN00598_T3.1-TANK
Model:	CORE T3.1 (GD)
Address:	85 N. Wilson Road Columbus, OH

10,000/8,000 GALLON TANK PLAN AND SECTION INSTALLATION DETAILS

Drawing No.:

T3.1

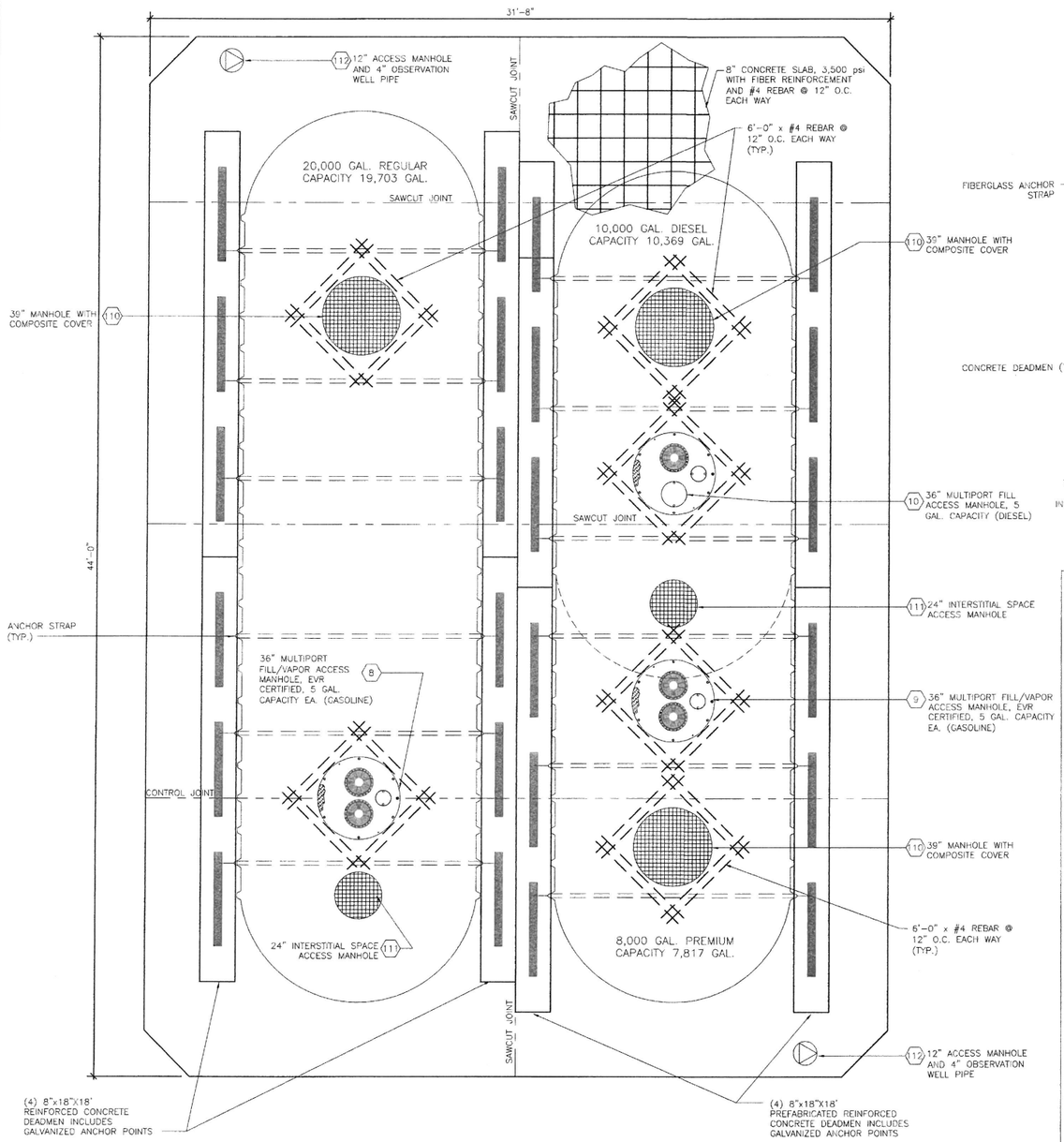

1 TANK SLAB PLAN DETAIL
SCALE: 3/8" = 1'-0"

SLOPE EXCAVATION OR SHORE TANK EXCAVATION PER PROJECT SOILS REPORT AND TANK MANUFACTURER INSTALLATION INSTRUCTIONS. ALL SHORING IF REQUIRED TO BE ENGINEERED AND PERMITTED UNDER SEPARATE PERMIT BY CONTRACTOR. CONTRACTOR SHALL ADHERE TO OSHA EXCAVATION REGULATIONS INCLUDING SIGNAGE AND BARRIERS. SHORING FOR ALL TANK EXCAVATIONS SHALL BE IN ACCORDANCE WITH OSHA 1926 SUBPART P, OSHA STANDARDS – EXCAVATIONS; FINAL RULE OCTOBER 1, 1989

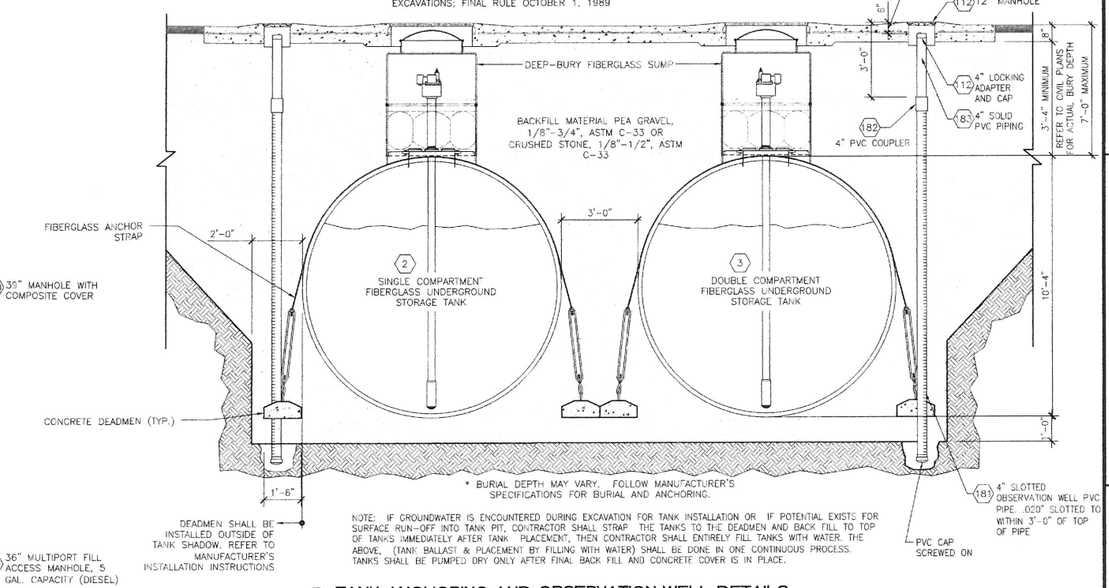

2 TANK ANCHORING AND OBSERVATION WELL DETAILS
SCALE: 3/8" = 1'-0"

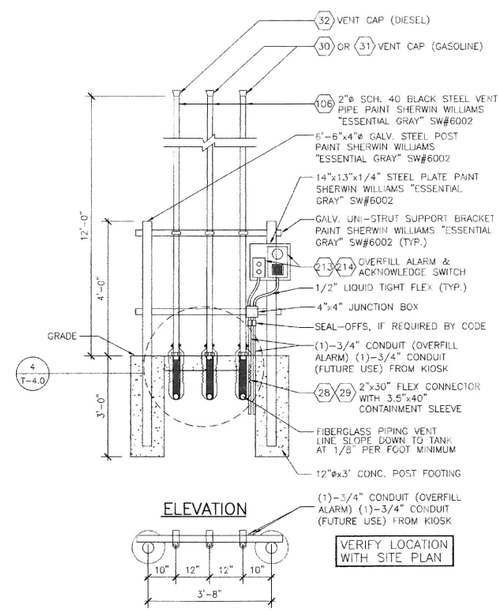

3 VENT RISER DETAIL
SCALE: 1/2" = 1'-0"

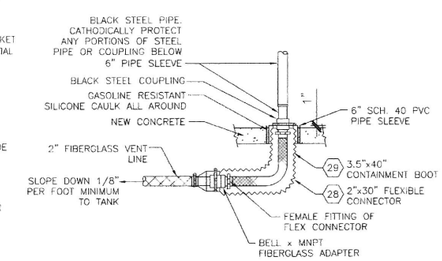

4 ENLARGED VENT RISER CONNECTION

THIS DRAWING IS AND SHALL REMAIN THE PROPERTY OF THE KROGER COMPANY REPRODUCTION OR ALTERATION OF THIS DRAWING WITHOUT THE EXPRESS WRITTEN PERMISSION OF THE KROGER COMPANY IS PROHIBITED. (NOT PUBLISHED: ALL RIGHTS RESERVED)

NOTE TO CONTRACTOR:
THIS SET OF DRAWINGS AND DOCUMENTS IS INTENDED AS A SET OF GUIDELINES FOR THE PROJECT AND ARE INTENDED TO BE USED IN CONJUNCTION WITH A SET OF CONSTRUCTION SPECIFICATIONS TO BE SUPPLIED BY OWNER. THEY MUST BE READ TO INCORPORATE ALL APPLICABLE FEDERAL, STATE, AND LOCAL CODES INCLUDING FEDERAL A.D.A. REQUIREMENTS. THIS SET ASSUMES THAT THERE ARE NO UNUSUAL SOIL CONDITIONS OR WIND LOADS. THE FAILURE OF THIS CONDITION MAY REQUIRE SIGNIFICANT CHANGES TO THESE DOCUMENTS.
IT IS THE RESPONSIBILITY OF THE GENERAL CONTRACTOR TO CONFORM TO ALL APPLICABLE CODES AND TO INFORM THE OWNERS/ARCHITECTS OF ANY QUESTIONS OR CLARIFICATIONS WHICH ARE DESIRED. CONTRACTORS SHALL ALSO VISIT THE SITE BEFORE BIDDING. CONTRACTORS ARE REQUIRED TO KNOW ALL OBSERVABLE CONDITIONS AND APPLICABLE CODES.

The Kroger Co.
Supermarket Petroleum Group
Denver, CO 80239
Phone (303) 915-5901
Fax (303) 915-5906
Kroger

STATE OF OHIO
DAVID A. GUETIG
66325
REGISTERED PROFESSIONAL ENGINEER
3/9/12

REVISIONS

No.	DESCRIPTION	DES BY	DRAWN BY	DATE

Project #:	#N598
Designed By:	MDC
Drawn By:	SEF
Checked By:	MDC
Date:	MARCH, 2012
Scale:	FULL
Disk File:	KroN00598_T4.0-SLAB
Model:	CORE T4.0 (GD)
Address:	85 N. Wilson Road Columbus, OH

TANK SLAB, ANCHORING AND MISCELLANEOUS INSTALLATION DETAILS

Drawing No.:
T4.0

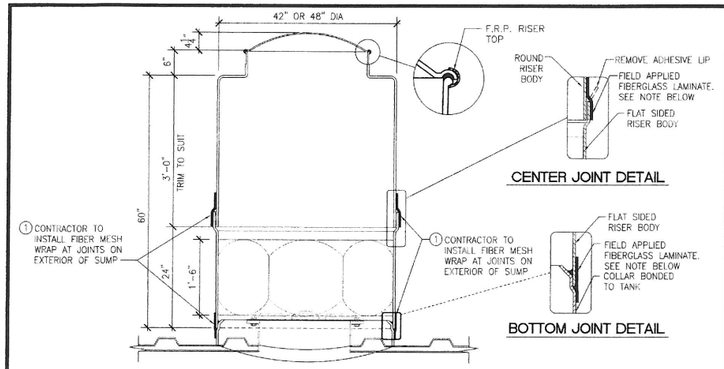

1 CONTRACTOR TO GLASS WRAP & LAMINATE (2 LAYERS MINIMUM) AT EACH SUMP JOINT. SPECIFIC ATTENTION MUST BE GIVEN TO SURFACE PREP AS TESTING REQUIREMENTS WILL DETECT THE SMALLEST OF FLAWS. ALL MATERIALS MUST BE COMPATIBLE WITH GASOLINE AND GASOLINE BLENDS UP TO 85% ETHANOL. FIBERGLASS AND RESIN MUST EXTEND A MINIMUM OF 2" BEYOND JOINT LINE IN EACH DIRECTION.

***NOTE:**
CONTRACTOR SHALL BE HELD RESPONSIBLE FOR PROPER INSTALLATION & PREPARATION PER MANUFACTURERS INSTRUCTIONS AND SHALL REINSTALL SUMPS IF HYDROSTATIC TESTING SHOWS LEAKING IN THIS AREA OF THE SUMP. TESTING OF SUMP SHALL BE PERFORMED AFTER REDUCER IS INSTALLED.

1 SECTION VIEW - TURBINE SUMP INSTALLATION DETAIL
SCALE: 3/4" = 1'-0"

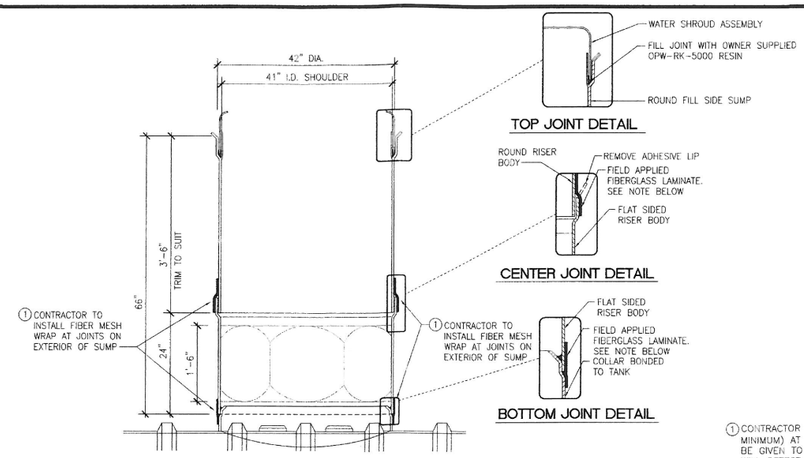

1 CONTRACTOR TO GLASS WRAP & LAMINATE (2 LAYERS MINIMUM) AT EACH SUMP JOINT. SPECIFIC ATTENTION MUST BE GIVEN TO SURFACE PREP AS TESTING REQUIREMENTS WILL DETECT THE SMALLEST OF FLAWS. ALL MATERIALS MUST BE COMPATIBLE WITH GASOLINE AND GASOLINE BLENDS UP TO 85% ETHANOL. FIBERGLASS AND RESIN MUST EXTEND A MINIMUM OF 2" BEYOND JOINT LINE IN EACH DIRECTION.

***NOTE:**
CONTRACTOR SHALL BE HELD RESPONSIBLE FOR PROPER INSTALLATION & PREPARATION PER MANUFACTURERS INSTRUCTIONS AND SHALL REINSTALL SUMPS IF HYDROSTATIC TESTING SHOWS LEAKING IN THIS AREA OF THE SUMP. TESTING OF SUMP SHALL BE PERFORMED AFTER REDUCER IS INSTALLED.

2 SECTION VIEW - FILL SUMP INSTALLATION DETAIL
SCALE: 3/4" = 1'-0"

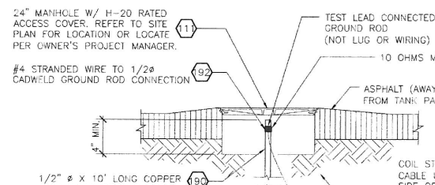

GROUND ROD DETAIL

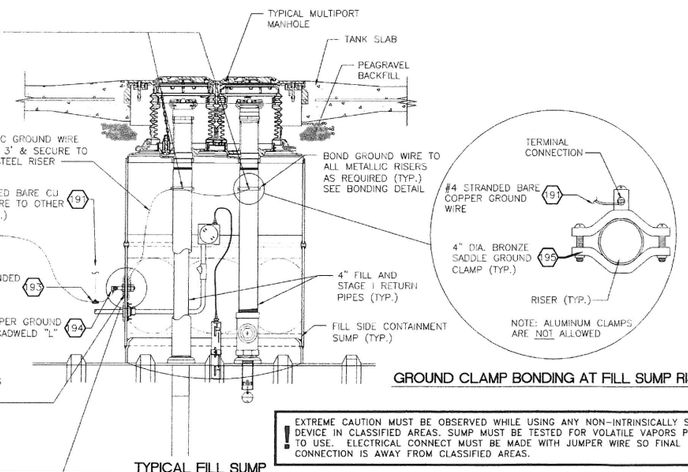

TYPICAL FILL SUMP

GROUND CLAMP BONDING AT FILL SUMP RISERS

NOTE:
SEE TANK FUELING SITE PLAN FOR SPECIFIC TANK LAYOUT AND NUMBER OF GROUNDING CONNECTIONS REQUIRED.

NOTE:
ALL EXTERIOR WIRE PENETRATIONS ARE REQUIRED TO BE CAD WELDED TO ENSURE EFFECTIVE GROUNDING.

NOTE:
FOR PENETRATIONS OF THE SUMP WALLS, SOLID BRONZE STUD BOLTS ARE TO BE USED AND THE INTERIOR SUMP GROUND WIRES ARE TO BE CONNECTED VIA TERMINAL CONNECTORS TO THE BOLTS. BOLTS TO BE SEALED BOTH INSIDE AND OUT WITH GLASS MATT & RESIN.

! EXTREME CAUTION MUST BE OBSERVED WHILE USING ANY NON-INTRINSICALLY SAFE DEVICE IN CLASSIFIED AREAS. SUMP MUST BE TESTED FOR VOLATILE VAPORS PRIOR TO USE. ELECTRICAL CONNECT MUST BE MADE WITH JUMPER WIRE SO FINAL CONNECTION IS AWAY FROM CLASSIFIED AREAS. !

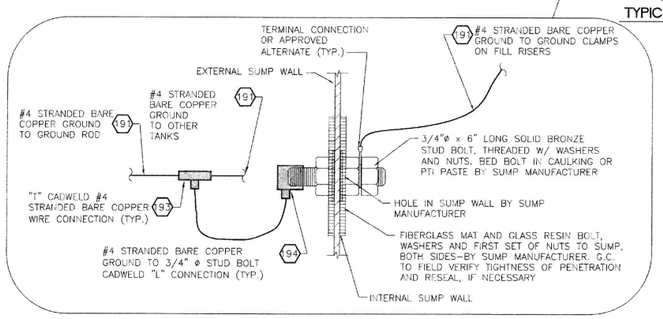

TYPICAL GROUNDING PENETRATION INTO SUMP AND CONNECTION DETAIL
(SEE INSTALLATION SEQUENCE NOTES)

GROUNDING EQUIPMENT
(SUPPLIED BY CONTRACTOR)

ITEM NO.	DESCRIPTION
90	1/2" ø X 10' LONG COPPERBONDED GROUND ROD: "ERICO" PART NO. 611300 (UL LISTED)
91	#4 AWG STRANDED BARE COPPER GROUND WIRE. PROVIDE TERMINAL CONNECTORS AT U-BOLT CONNECTIONS
92	CADWELD #4 WIRE CABLE TO GROUND ROD CONNECTION "ERICO" PART NO. GTT14A1L, USE WELD METAL #32 (ALTERNATE: BURNDY #B8435)
93	CADWELD "T" CONNECTION FOR #4 BARE STRANDED WIRE CABLES. "ERICO" PART NO. TAC1L1L, USE #32 WELD METAL. (ALTERNATE: BURNDY #B221)
94	CADWELD "L" CONNECTION FOR #4 BARE STRANDED WIRE CABLES TO 3/4" BRONZE STUD "ERICO" PART NO. GRC181L, USE #90 WELD METAL. (ALTERNATE: BURNDY #YGHP29C2)
95	4" NPT ADJUSTABLE BRONZE PIPE CLAMP, LINO EQUIPMENT P/N JR-150-30 (905) 475-5086

3 FILL SUMP STATIC GROUND SYSTEM INSTALLATION AND BONDING DETAILS AND TEST PROCEDURES
SCALE: NONE

NOTES:

ALL STAGE I FILL AND VAPOR RISER ADAPTERS SHALL BE ELECTRICALLY GROUNDED TO PROMOTE THE RELAXATION OF STATIC CHARGE.

THE BONDING AND GROUNDING FOR STATIC ELECTRICITY PROTECTION SHALL BE IN COMPLIANCE PER ALL APPLICABLE FEDERAL, STATE AND LOCAL CODES INCLUDING NFPA 30, FLAMMABLE AND COMBUSTIBLE LIQUIDS CODE, NFPA 77, RECOMMENDED PRACTICE ON STATIC ELECTRICITY, NFPA 70, NATIONAL ELECTRIC CODE, AND THE CALIFORNIA CODE OF REGULATIONS, SUBCHAPTER 15, PETROLEUM SAFETY ORDERS-REFINING, TRANSPORTATION AND HANDLING, ARTICLE 5, FIRE AND EXPLOSIONS.

PER SECTION 6.4.1.3 OF NFPA 77, THE MEASURED TOTAL RESISTANCE IN THE GROUND PATH TO EARTH SHALL BE LESS THAN 1 MEGAOHM WHICH IS CONSIDERED ADEQUATE FOR RELAXATION OF STATIC CHARGE. THE MAXIMUM ALLOWABLE GROUND PATH TO EARTH RESISTANCE FOR STATIC ELECTRICITY GROUNDING APPLICATIONS SHALL NOT EXCEED 100,000 OHMS.

PER SECTION 6.4.1.3 OF NFPA 77, THE RESISTANCE IN METALLIC BONDING AND OR GROUNDING SYSTEMS SHALL BE LESS THAN 10 OHMS. RESISTANCE HIGHER THAN 10 OHMS INDICATES INADEQUATE CONNECTIONS.

A GROUNDING SYSTEM PER NEC CODE FOR CURRENT CARRYING CONDUCTORS SHALL BE CONSIDERED MORE THAN ADEQUATE FOR A STATIC ELECTRICITY GROUNDING SYSTEM.

PER THE NFPA 30, SECTION 5-6.3.4 ALL PARTS OF THE FILL PIPE ASSEMBLY, INCLUDING THE DROP TUBE, SHALL FORM A CONTINUOUS ELECTRICALLY CONDUCTIVE PATH.

THE MINIMUM WIRE SIZE FOR BONDING AND GROUNDING SHALL BE COPPER AWG #4

A 1/2" ø BY 10' LONG COPPER CLAD STEEL GROUND ROD SHALL BE DRIVEN INTO NATIVE SOIL ONLY. PLACING THE GROUND ROD INTO TANK PIT PEA GRAVEL SHALL NOT BE PERMITTED UNDER ANY CONDITIONS. THE CONTRACTOR IS RESPONSIBLE FOR CLEARING ANY UNDERGROUND UTILITIES PRIOR TO INSTALLATION OF THE GROUND.

THE GROUND ROD TO GROUND WIRE CONNECTION SHALL BE ACCESSIBLE THROUGH A H-20 RATED 12" DIAMETER MINIMUM ACCESS COVER TO ASSIST INSPECTION, MAINTENANCE AND TESTING. THE SCREW TYPE GROUND ROD CLAMP SHALL BE UL LISTED FOR DIRECT BURIAL.

ONE MAIN STRANDED #4 THHN CONDUCTOR SHALL BE RUN PAST EACH FILL SUMP. ONE STRANDED #4 THHN CONDUCTOR SHALL BE ROUTED TO EACH FILL SUMP. INSTALLATION AT SUMP SHALL BE AS FOLLOWS AND MUST BE COMPLETED IN ORDER NOTED AS FOLLOWS:

INSTALLATION SEQUENCE:

NOTE:
ALL CAD WELDS W/ EXCEPTION OF FINAL CAD WELD @ GROUND ROD NOTED IN SCHEDULE BELOW MAY BE PREFABRICATED OUTSIDE THE TANK AREA AND BROUGHT TO SITE.

1.) MAKE "L" CADWELD CONNECTION WITH #4 STRANDED WIRE AND 3/4" BRONZE STUD BOLT.
2.) MAKE #4 TERMINAL CONNECTION AND INSTALL SECOND INTERIOR NUT TO STUD TO SECURE THE CONNECTION. ROUTE #4 STRANDED WIRE TO BRONZE PIPE CLAMP AT FILL RISER AND MAKE CONNECTION. ROUTE ADDITIONAL GROUND WIRE TO VAPOR RISER AND SECURE WITH BRONZE PIPE CLAMP. TO ASSURE A COMPLETE CONNECTION, ANY PAINT OR COATING ON THE RISER SHALL BE REMOVED PRIOR TO INSTALLATION OF THE GROUND CLAMP.
3.) MAKE #4 STRANDED TO #4 STRANDED "T" CADWELD CONNECTIONS TO MAIN GROUND WIRE. THE CONDUCTORS SHALL HAVE 18" MINIMUM COVER.
4.) MAKE #4 STRANDED TO GROUND ROD CADWELD CONNECTION.

NOTE:
ELECTRICAL CONDUIT, FUELING SYSTEM HARDWARE OR THE STATION ELECTRICAL GROUNDING SYSTEM SHALL NOT BE USED FOR GROUNDING OR BONDING FILL AND VAPOR RISERS.

TESTING:

CAUTION: AVOID CONNECTING ANY ELECTRICAL TEST LEAD TO THE FILL OR VAPOR RISER IN A MANNER THAT WOULD POTENTIALLY PRODUCE STATIC DISCHARGE OR SPARKS OF ANY KIND.

THE FILL AND VAPOR RISERS SHALL BE TESTED AFTER INSTALLATION AND PERIODICALLY TO VERIFY BONDING AND GROUNDING COMPETENCY.

THE MAXIMUM RESISTANCE FROM ANY FILL OR VAPOR ADAPTER TO THE BODY OF THE GROUND ROD SHALL NOT EXCEED 10 OHMS FOR A METALLIC RISER PIPE, SPILL CONTAINMENT AND ADAPTER ASSEMBLIES.

THE RESISTANCE THROUGH ANY COMPOSITE OR NONMETALLIC STAGE I CONTAINMENT FITTING SHALL BE MEASURED WITH A OHMMETER CAPABLE OF READING UP TO 10 MEGAOHMS. THE SUM COLLECTIVE RESISTANCE OF THESE SEMI-CONDUCTIVE ELEMENTS SHALL NOT EXCEED 100,000 OHMS. FOR THESE SYSTEMS, THE GROUND RESISTANCE TESTER MUST BE CONNECTED TO THE GROUND CONDUCTOR CONNECTION ON THE COMPOSITE CONTAINMENT SYSTEM OR RISER PIPE.

FOR INSTALLATIONS WITHOUT AN EXPOSED GROUND ROD CONNECTION, TOTAL SYSTEM RESISTANCE SHALL BE MEASURED WITH A GROUND RESISTANCE TESTER BY A QUALIFIED ELECTRICIAN FAMILIAR WITH GROUND TESTING. THE TWO POINT METHOD MAY BE USED WITH THE SITE ELECTRICAL GROUNDING AS THE SECOND TEST POINT.

THE NEC MAXIMUM GROUND PATH RESISTANCE FOR CURRENT CARRYING APPLICATIONS IS 25 OHMS. HOWEVER, GROUND ROD TO EARTH RESISTANCE UP TO 100 OHMS SHALL BE ACCEPTABLE FOR STATIC ELECTRICITY PROTECTION OF THE FILL AND VAPOR RISERS.

THIS DRAWING IS AND SHALL REMAIN THE PROPERTY OF THE KROGER COMPANY REPRODUCTION OR ALTERATION OF THIS DRAWING WITHOUT THE EXPRESS WRITTEN PERMISSION OF THE KROGER COMPANY IS PROHIBITED. (NOT PUBLISHED: ALL RIGHTS RESERVED)

NOTE TO CONTRACTOR:
THIS SET OF DRAWINGS AND DOCUMENTS IS INTENDED AS A SET OF GUIDELINES FOR THE PROJECT AND ARE INTENDED TO BE USED IN CONJUNCTION WITH A SET OF CONSTRUCTION SPECIFICATIONS TO BE SUPPLIED BY OWNER. THEY MUST BE READ TO INCORPORATE ALL APPLICABLE FEDERAL, STATE, AND LOCAL CODES INCLUDING FEDERAL A.D.A. REQUIREMENTS. THIS SET ASSUMES THAT THERE ARE NO UNUSUAL SOIL CONDITIONS OR WIND LOADS. THE FAILURE OF THIS CONDITION MAY REQUIRE SIGNIFICANT CHANGES TO THESE DOCUMENTS. IT IS THE RESPONSIBILITY OF THE GENERAL CONTRACTOR TO CONFORM TO ALL APPLICABLE CODES AND TO INFORM THE OWNERS/ARCHITECTS OF ANY QUESTIONS OR CLARIFICATIONS WHICH ARE DESIRED. CONTRACTORS SHALL ALSO VISIT THE SITE BEFORE BIDDING. CONTRACTORS ARE REQUIRED TO KNOW ALL OBSERVABLE CONDITIONS AND APPLICABLE CODES.

The Kroger Co.
Supermarket Petroleum Group
Denver, CO 80239
Phone (303) 715-5901
Fax (303) 715-5805

Kroger

STATE OF OHIO
DAVID A. GUETIG
66325
REGISTERED PROFESSIONAL ENGINEER
3/9/12

REVISIONS

No.	DESCRIPTION	T.E.S. BY	DRAWN BY	DATE

Project #:	#N508
Designed By:	MDC
Drawn By:	SEF
Checked By:	MDC
Date:	MARCH, 2012
Scale:	FULL
Disk File:	KroN0059B_T5.0-GROUND
Model:	CORE T5.0
Address:	85 N. Wilson Road Columbus, OH

TANK TURBINE/FILL SUMP AND STATIC GROUNDING INSTALLATION DETAILS

Drawing No.: T5.0

CESO

We're on a Mission!

May 22, 2013

Ms. Kimberly Dooley, AICP
Planning and Development Office
City of Grove City
4035 Broadway
Grove City, OH 43123

Re: Kroger Fuel N341 – 2410 Stringtown Road
Special Use Submittal – Fuel Station Use – Application #201304290016

Dear Ms. Dooley:

Attached are (20) copies of revised plan submittal as requested for the fuel station special use for the Kroger Fuel project at 2410 Stringtown Road. Please note that Kroger has decided since the initial submittal to reduce the canopy layout to seven (7) dispensers and rotate the canopy ninety (90) degrees from the original submittal.

The comments from your letter dated May 10, 2013 have been addressed as follows:

1. Dimensions for the canopy in note F have been corrected as requested to match the dimensions marked on the site plan.

2. The proposed height of the canopy is 19'-0" and has been noted on the site plan.

3. A copy of the application with the owner's signature is attached as requested.

4. Additional details for the underground tanks have been included with this plan submittal as requested.

5. Parking spaces have been revised to meet zoning code requirements as requested. The handicap parking space has been revised to be van accessible as requested.

Please review the attached revised submittal and let me know if you have any questions or need any additional information. Thanks.

Sincerely,

Nick Hershberger, PE
Engineering Services Manager

2800 Corporate Exchange Dr., Suite 160
Columbus, OH 43231

Phone 614.794.7080
Fax 614.794.4492

e-mail ceso@cesoinc.com
website www.cesoinc.com