 No. 6954-109323

QUOTE

Store 6954 GROVE CITY
1680 STRINGTOWN ROAD
GROVE CITY, OH 43123

Phone: (614) 539-4554
Salesperson: RJB054
Reviewer:

QUOTE

2011-08-17 12:25

Prices Valid Thru: 08/24/2011

SOLD TO

Name	**PARKER KEITH**	Home Phone	**(614) 565-6160**
Address	2563 LEAWOOD RD	Work Phone	
		Company Name	
City	GROVE CITY	Job Description	24'X24'POLE BARN
State	OH	Zip 43123	County FRANKLIN

CUSTOMER PICKUP #1

MERCHANDISE AND SERVICE SUMMARY

We reserve the right to limit the quantities of merchandise sold to customers

REF # W15 SKU # 515-664 Customer Pickup / Will Call

STOCK MERCHANDISE TO BE PICKED UP:

REF #	SKU	QTY	UM	DESCRIPTION	TAX	PRICE EACH	EXTENSION
R04	775-940	21.00	BD	NS WEATHERED WOOD SG LIFETIME /	Y	$29.00	$609.00
R05	386-081	21.00	EA	7/16 4X8 OSB /	Y	$5.97	$125.37
R06	223-180	4.00	EA	COBRA RIGID VENT SNOW COUNTRY-4FT PC /	Y	$10.98	$43.92
R07	797-592	1.00	BD	TTEX WEATH WOOD HIP & RIDGE /	Y	$46.59	$46.59
R08	161-756	4.00	EA	2X6-12FT. #2/BTR KD-HT SPF / FASCIA	Y	$4.96	$19.84
R09	873-276	12.00	EA	2 1/2X1X10FT BRN ALUM-ROOF EDGE /	Y	$3.96	$47.52
R10	112-525	1.00	EA	COIL ROOF NAIL 1 1/4IN 7-2M GALV /	Y	$26.98	$26.98
R11	668-946	2.00	BG	7/16" PLYWOOD CLIP-50PAK /	Y	$5.98	$11.96
R12	258-830	2.00	RL	#15 FELT 432 SQ FEET /	Y	$17.00	$34.00
R14	102-924	48.00	EA	H2.5AZ HURRICANE TIE Z-MAX /	Y	$0.58	$27.84

S.O. MERCHANDISE TO BE PICKED UP: S/O BLUELINX WOOD PRODUC REF # S02

S0201	336-322	4.00	EA	1-3/4 X 9-1/4 X / 1-3/4 X 9-1/4 X 24' LVL / 1-3/4 X 9-1/4 X 24' LVL	Y	$74.67	$298.68

NOT VALID FOR MERCHANDISE CARRY-OUT

FOR WILL CALL
MERCHANDISE PICK-UP
PROCEED TO WILL CALL OR
SERVICE DESK AREA
(Pro Customers, Proceed To The Pro Desk)

Customer Copy

CUSTOMER PICKUP #1
(Continued)

REF #W15

S.O. MERCHANDISE TO BE PICKED UP: S/O FOREST PRODUCTS REF # S03

S03FR	188-728	1.00			Y	$0.00	$0.00
S0301	269-868	20.00	EA	4X8 N/G PLYWOOD / 4X8 N/G PLYWOOD SHEATING / 4X8 N/G PLYWOOD SHEATING	Y	$24.00	$480.00

S.O. MERCHANDISE TO BE PICKED UP: S/O HD COMPONENTS REF # S13

S1301	772-502	1.00	EA	TRUUS QUOTE FRO / TRUUS QUOTE FROM CARDINAL TRUSS / TRUUS QUOTE FROM CARDINAL TRUSS	Y	$1,350.00	$1,350.00

SCHEDULED PICKUP DATE: Will be scheduled upon arrival of all S/O Merchandise **MERCHANDISE TOTAL:** $3,121.70

END OF CUSTOMER PICKUP - REF #W15

CUSTOMER PICKUP #2

REF # W17 SKU # 515-664 Customer Pickup / Will Call

S.O. MERCHANDISE TO BE PICKED UP: S/O UNIVERSAL FOREST PRO REF # S16

S1601	270-415	6.00	EA	6X6-14' PT / 6X6-14' PT / 6X6-14' PT	Y	$47.50	$285.00

SCHEDULED PICKUP DATE: Will be scheduled upon arrival of all S/O Merchandise **MERCHANDISE TOTAL:** $285.00

END OF CUSTOMER PICKUP - REF #W17

TOTAL CHARGES OF ALL MERCHANDISE & SERVICES

ORDER TOTAL	$3,431.70
SALES TAX	$231.63
TOTAL	$3,663.33
BALANCE DUE	$3,663.33

END OF ORDER No. 6954-109323

TERMS AND CONDITIONS

WILL CALL

Will Call items will be held in the store for 7 days. For Will Call merchandise pick up, proceed to Will Call/Service Desk area(Pro Customers, proceed to the Pro Desk).

***** CONTINUED ON NEXT PAGE *****

403180

CUSTOMER'S ORDER NO.	DEPARTMENT	DATE

NAME Parkers.

ADDRESS Broadway

CITY, STATE, ZIP Grove City, Ohio

SOLD BY	CASH	C.O.D.	CHARGE	ON ACCT.	MDSE RETD	PAID OUT

QUANTITY	DESCRIPTION	PRICE	AMOUNT
1	Staining shelder		
2	behind the bar		
3	and all new fencing		
4			
5	labor & Material		$1600.00
6			
7			
8	George Bennett		
9			
10			
11			
12			
13			
14			
15			
16			
17			
18			
19			
20			

RECEIVED BY

adams RDC5805

KEEP THIS SLIP FOR REFERENCE

DUPLICATE

255735

DATE 10 / 5 / 11	☐ SERVICE ☐ WILL CALL ☐ INSTALL ☐ DELIVER	PHONE
NAME PARKERS TAVERN		MAKE
ADDRESS		MODEL
GROVE CITY		SERIAL
ITEM TO BE SERVICED	NATURE OF SERVICE REQUEST ESTIMATE	

QUAN.		DESCRIPTION OF PARTS OR MATERIALS	AMOUNT
	-	INSTALL 12 CAN LIGHTS,	
		TRIMS + BULBS W/ WIRE	2400 -
	-	INSTALL 2 52" CEILING FANS	
		W/ LIGHT KIT ON REMOTE	
		W/ WIRE	550 -
	-	INSTALL 2 DIMMER SWITCHES	
		W/ WIRE W/ CONDUIT SLEVES	230 -
	-	INSTALL 20A BREAKER	250 -

LABOR PERFORMED	TOTAL MATERIALS	3430 -
ESTIMATE INCLUDES ALL	TAX	231 52
MATERIAL + LABOR	TOTAL LABOR	
	TOTAL AMOUNT ▶	3661 52

DATE WANTED	DEPOSIT	RECEIVED BY
/ /	$	

ESTIMATES ARE FOR LABOR ONLY, MATERIAL ADDITIONAL. WE WILL NOT BE RESPONSIBLE FOR LOSS OR DAMAGE CAUSED BY FIRE, THEFT, TESTING OR ANY OTHER CAUSES BEYOND OUR CONTROL.

AUTHORIZED BY:

REPAIR ORDER ORIGINAL

5084

TERMS - NET CASH
NO GOODS HELD OVER 30 DAYS

CUSTOMER'S ORDER NO.	DEPARTMENT	DATE

NAME

ADDRESS 1 Broadway

CITY, STATE, ZIP Grove City, Ohio

SOLD BY	CASH	C.O.D.	CHARGE	ON ACCT.	MDSE RETD	PAID OUT

QUANTITY	DESCRIPTION	PRICE	AMOUNT
1			
2	Setting Posts		
3	all framing work		
4			
5	Setting trusses, sheting		
6	and roofing		$4600.00
7			
8	George Bennett		
9			
10			
11			
12			
13			
14			
15			
16			
17			
18			
19			
20			

RECEIVED BY

adams RDC5805

KEEP THIS SLIP FOR REFERENCE

ORIGINAL

Select Language

Powered by Google Translate

Clarence E. Mingo, II
Franklin County Auditor

Auditor Home | Real Estate Home | Search | Specialty Maps | Auditor Services | Contact Us | On-Line Tools

MAP(GIS)

Parcel Info

- Summary
- New Tentative Value
- Property Profile
- Land
- Building
- Improvements
- MAP(GIS)
- Sketch
- Photo
- Transfer History
- 2010 BOR
- Area Sales Activity
- Area Rentals
- Tax/Payment Info
- Current Levy Info
- Assessment Payoff
- Tax Distribution
- Levy Distribution
- Rental Contact
- Tax Estimator
- Property Reports

Recorder's Office Document Search

Area Sex Offender Inquiry

Pay Real Estate Taxes Here

Parcel ID	Map Routing Number	Owner	Location
040-000167-00	040-M089 -130-00	PARKERS PROPERTY HOLDINGS LLC	3998 BROADWAY

- Area Maps
- Select Items
- Proximity Report
- Theme Maps
- Print

County Location »

Legend »

Zoom IN OUT

Move

Current Map: 146' x 107'

Image Date: Sat Oct 8 14:50:49 2011

Ortho Photographs taken in 2009

Click to view map using:

Google | Yahoo! | bing

The closest fire station from the center of this map is 4046 feet away. See below for more details.

Measurements are over straight-line distances.

Link to:

County Recorder Documents

Closest Fire Departments	
Jackson Township - 201	4046 feet
Jackson Township - 202	1.4 miles
Columbus Station 31	3.0 miles

powered by MetaMAP

Data updated on: 2011-10-08 06:36:38

Disclaimer
The information on this web site is prepared for the real property inventory within this county. Users of this data are notified that the public primary information source should be consulted for verification of the information contained on this site. The county and vendors assume no legal responsibilities for the information contained on this site. Please notify the Franklin County Auditor's Real Estate Division of any discrepancies.

PARKERS TAVERN ON BROADWAY

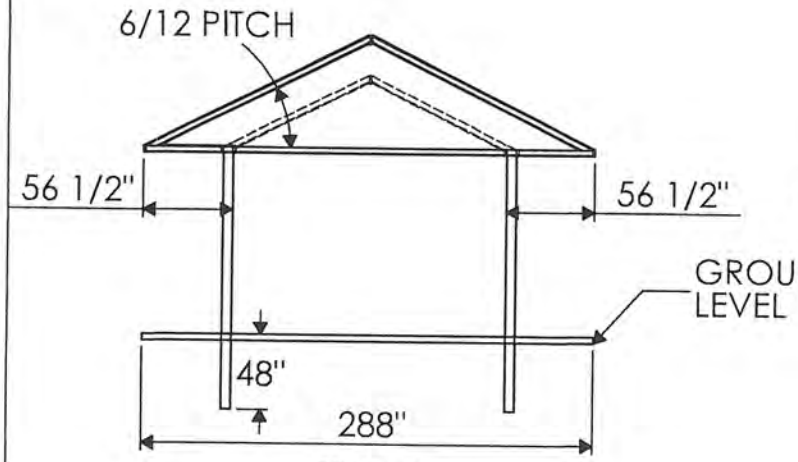

FRONT

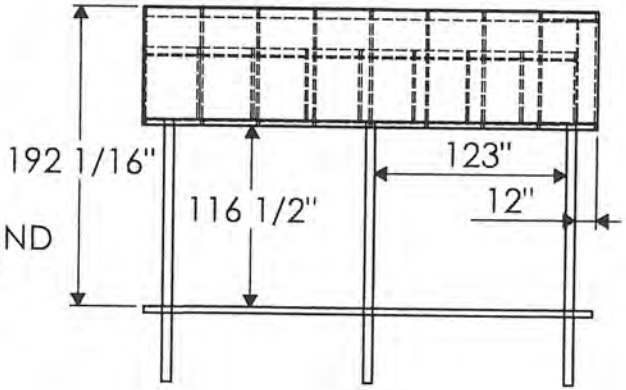

SIDE

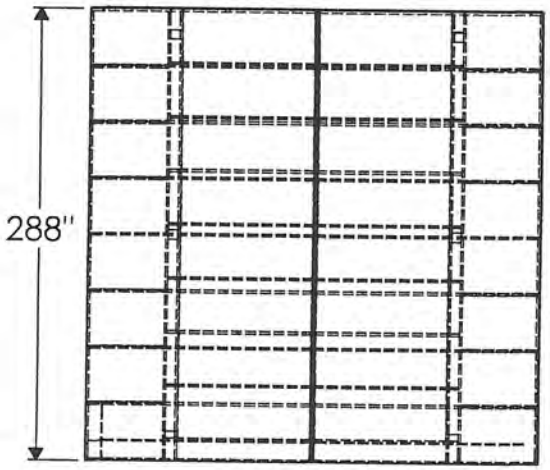

TOP

ISO

OUTDOOR SHELTER